02870-1

Gates
Removable Offset Gate With Wing

NOTE:
TO BE USED AS A GUIDELINE ONLY.
NOT TO SCALE. REMOVE CITY TITLE BLOCK AND REDRAW TO REPRESENT SITE SPECIFIC CONDITIONS. ALL SITE SPECIFIC CONDITIONS ARE TO BE CONFIRMED BY THE PROJECT CONSULTANT.

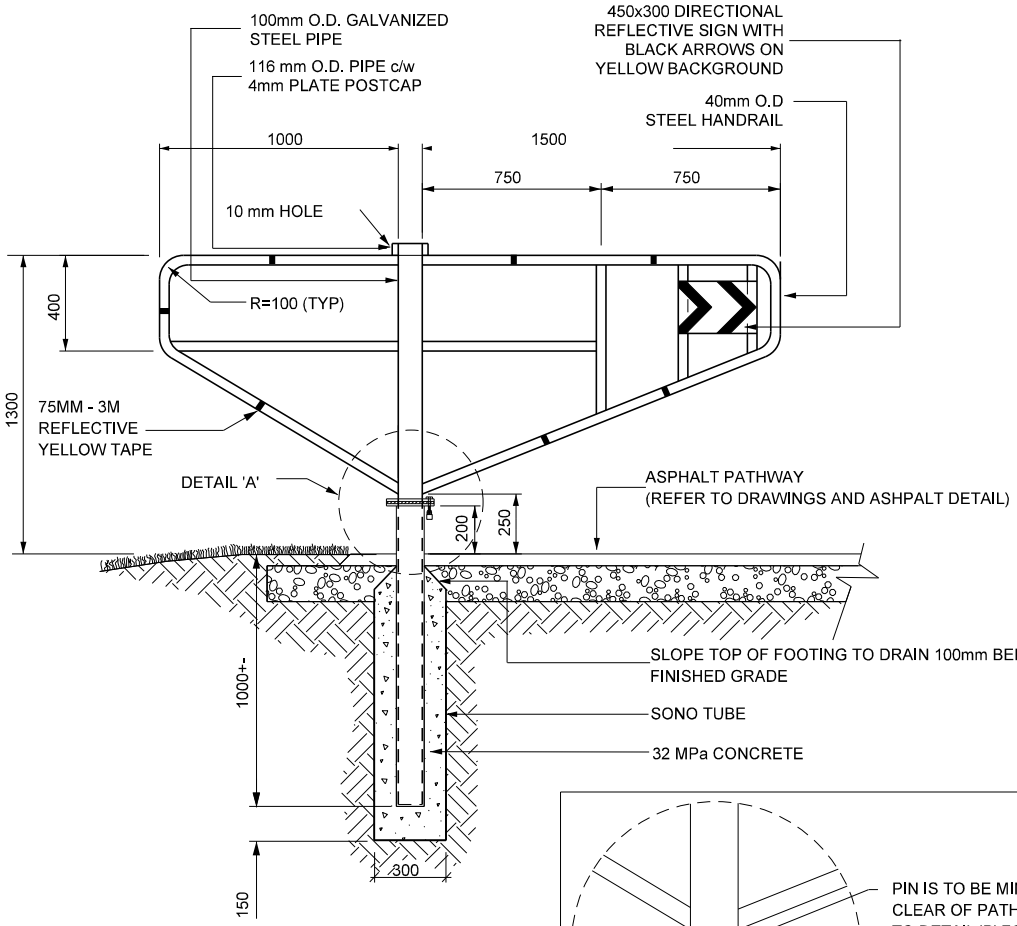

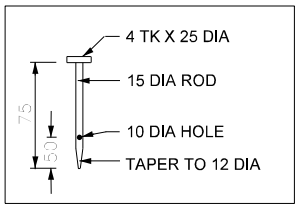

DETAIL 'B' – PIN

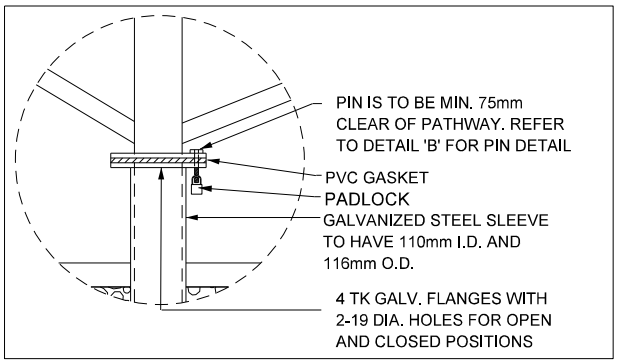

DETAIL 'A' – SLEEVE CONNECTION

NOTES:

1. ALL GATE MATERIAL MUST BE GALVANIZED AFTER FABRICATION.
2. ALL 40 DIA. PIPE MUST BE STD. SCHEDULE 40 NEW BUTT WELD PIPE.
3. GATE POST TO EXTEND A MIN. OF 1000 INTO FOUNDATION SLEEVE PIPE.
4. PIN IS WELDED TO GATE WITH A 300 LONG GALV. CHAIN.
5. DIRECTIONAL SIGN TO BE MIN. 1.5 MM TK ALUMINUM OR GALVANIZED METAL RIVETTED TO GATE AT EACH CORNER ON EACH SIDE OF GATE.
6. ALL WELDING AND GALVANIZING DRIPS AND SPLATTERS TO BE REMOVED
7. 40MM O.D STEEL HANDRAIL ARE TO BE CONTINUOUS PIPE.
8. ALL DIMENSIONS ARE IN MILLIMETRES UNLESS OTHERWISE NOTED
9. THE LOCATION OF THE GATE IS TO BE APPROVED BY A COMMUNITY SERVICES REPRESENTATIVE
10. FOR ASPHALT REFER TO C.S. DETAIL 02510-1.
11. PADLOCK TO BE PROVIDED BY THE COMMUNITY SERVICES DEPARTMENT

N.T.S.

Detail: 02870-1

ORIGINAL DATE: Jan 17/17
REVISION DATE: month xx/1x

MISSISSAUGA