Functional Servicing & Stormwater Management Report

Residential Development

958-960 East Avenue

Lakeview (Ward 1)

City of Mississauga

19 April 2021

fabian papa & partners

A Division of FP&P HydraTek Inc.

216 Chrislea Road, Suite 204 | Vaughan, Ontario | L4L 8S5
Tel: 905-264-2420 | www.fabianpapa.com

CONTENTS

1.0 INTRODUCTION **2**

2.0 WATER SUPPLY **2**

2.1 Supply Demands 3
2.2 Water Service Connections 4
2.3 Domestic and Fire Flow Analysis 5

3.0 SANITARY DRAINAGE **5**

3.1 Sanitary Design Criteria 5
3.2 Foundation Drainage 6
3.3 Sanitary Design Flows 6
3.4 Receiving Sanitary Sewer Capacity 7
3.5 Sanitary Service Connection 7

4.0 STORM DRAINAGE **8**

4.1 Overview 8
4.2 Design Criteria 8
4.3 Pre-Development Conditions 9
4.4 Water Quantity Management 9
4.5 Water Quality Management 12
4.6 Water Balance Management 13
4.7 Storm Service Connection 14
4.8 Emergency Overflow 14
4.9 Sediment and Erosion Control 15
4.10 Sustainable & Low-Impact Development (LID) Alternatives 15

5.0 CONCLUSIONS **15**

Appendix A Vicinity Map of Subject Site
Aerial Photograph of Subject Site
Sample Architectural Drawings

Appendix B Plan & Profile Drawings (Byngmount Avenue, East Avenue, and municipal easement)
Region of Peel Servicing Assessment

Appendix C Water Demand Calculations

Appendix D Sanitary Sewer Demand & Design Calculations
Excerpt Copy of Hydrogeological Report (WSP)

Appendix E City of Mississauga Watershed Boundaries
City of Mississauga SWM Criteria
City of Mississauga Drainage Area Map
City of Mississauga Storm Design Sheet
Pre- & Post-Development Drainage Plan
Stormwater Runoff Coefficient Calculations
Storm Sewer Design Calculations
Stormwater 100-Year Storage Calculations
Water Quality, and Water Balance Calculations
Zurn Control Drain

Appendix F Site Servicing and Grading Exhibits

1.0 INTRODUCTION

Fabian Papa & Partners has been retained by RAW Design Studios, on behalf of the Peel Housing Corporation (PHC), to prepare this Functional Servicing & Stormwater Management Report in support of the Zoning By-law Amendment (ZBA) and Official Plan Amendment (OPA) applications from a municipal servicing perspective. This report discusses the provision of municipal services for the above captioned development proposal, including the stormwater management strategy.

Located at 958-960 East Avenue in Lakeview (Ward 1), City of Mississauga, the subject site is bounded by Lakeshore Road East to the north, East Avenue to the east, a recently constructed Peel Region Paramedic Station to the south, and both Byngmount Avenue and a residential subdivision to the west.

The subject site is approximately 7,804m^2 (0.78 ha) in size, however, a re-alignment of the property line to the south is anticipated, resulting in a net area of 7,482 m^2 (0.75 ha).

The subject site currently hosts two separate low-rise townhouse buildings, consisting of a total of 30 units. A vicinity map and aerial photograph of the subject site can be found in Appendix A.

The development proposal contemplates the construction of a 7-storey residential building with a total of 151 residential units and 1 underground level for parking, storage, and utility rooms. Architectural floor plans can be found in Appendix A for reference.

It should be noted that a significant portion of the subject site is encumbered by a multitude of easements reserved for Regional sanitary force mains and large diameter water transmission mains. The proposed building therefore will be limited to the unencumbered portions of the subject site, and servicing within the easement areas shall be minimized.

The City and Region's plan and profile drawings for the surrounding areas were obtained and reviewed as part of this assessment. Pertinent information has been incorporated into the Site Servicing & Grading Exhibits, and excerpt copies of the drawings can be found in Appendix B for reference. Furthermore, the Region of Peel's Public Works Department recently performed a servicing assessment in support of the proposed development. The report, "Water and Wastewater Servicing Analysis", henceforth referred to as the "Region's Servicing Assessment", in its entirety can be found in Appendix B for reference.

It should be noted that the City of Mississauga and the Region of Peel are currently in discussions to extend Byngmount Avenue to East Avenue. This has been taken into consideration as part of the servicing strategy and is discussed in subsequent sections.

2.0 WATER SUPPLY

Located just north of the Lakeview Water Treatment Plant, the existing municipal water infrastructure adjacent to the subject property is consists of a 300 mm diameter local distribution watermain, a 900 mm diameter transmission main, and a 1,500 mm diameter transmission main within East Avenue, a 300 mm diameter local watermain and a 600 mm diameter feedermain within Lakeshore Road East, and a 600 mm diameter feedermain (Zone 1) and a 2,100 mm diameter transmission main (Zone 2) within the easement areas. Existing municipal hydrants are located along the east side of East Avenue and the north side of Lakeshore Road East.

At the time of preparing this report, an independent hydrant flow test was not available, however, based on historical data and general knowledge of Pressure Zone 1 in this area, the following response curve has been assumed.

Assumed Flow-Pressure Response Curve

Flow (usgpm)	Flow (L/s)	**Pressure (psi)**	Pressure (kPa)
0	0	**86**	596
314	19.8	**85**	590
738	46.6	**84**	579
1297	81.8	**80**	552
1087	68.6	**82**[1]	563
5039	317.9[2]	**20**	138

Furthermore, the results of the Region's Servicing Assessment confirm that the existing 300 mm local watermain on East Avenue has sufficient capacity to support the increase in population density (assuming 150 units with an equivalent population of 405), and that there is sufficient capacity in the system under emergency conditions (i.e. fire). Please see the Region's "Water and Wastewater Servicing Analysis" which can be found in Appendix B.

2.1 Supply Demands

The domestic water demand for the subject site was calculated based on the Region of Peel demand criteria. The detailed demand calculations, which can be found in Appendix C, is summarized in the following table:

Domestic Water Supply Demands

Building Use	Units / Area	Population	Avg. Domestic Demand, ADD (L/s)	Peak Hour Demand, PHD (L/s)	Peak Day Demand, MDD (L/s)
Residential	151 units	334	1.1	3.3	2.2

The recommended fire flow demand has been calculated using the criteria outlined in the Water Supply for Public Fire Protection Manual, 1999, by the Fire Underwriters Survey (FUS). Appropriate reductions and increases have been applied to the calculations as follows:

Fire Underwriters Survey Coefficients

Construction Coefficient	0.6 (fire resistive)
Building Occupancy	-15% (limited-combustible)
Fire Suppression System	-30% (automatic sprinkler)
Exposure / Proximity	+10%

As the building is sprinkled, the floor area is calculated as follows:

Area (A) = Area of largest floor plus 25% of two adjoining floors

$A = 2{,}156\ m^2 + [(2{,}137\ m^2 + 2{,}136\ m^2) \times 0.25] = 3{,}224\ m^2$

[1] Interpolated residual pressure for design fire flow based on assumed response curve.

[2] Theoretical Flow predicted at 20 psi residual pressure and calculated per NFPA 291

The detailed fire flow calculations are as follows:

$F = 220 \times C \times A^{0.5} = 220 \times 0.6 \times (3{,}224\ m^2)^{0.5} = 7{,}495$ L/min

F = 7,000 L/min (rounded to nearest 1,000)

F1 = 7,000 L/min x 0.85 = 5,950 L/min

F2 = F1 × 0.50 = 5,950 L/min × 0.30 = 1,785 L/min

F3 = F1 × 0.10 = 5,950 L/min × 0.10 = 595 L/min

Fire Flow = F1 – F2 + F3 = 5,950 – 1,785 + 595 = 4,760 L/min

Fire Flow = 5,000 L/min (rounded to nearest 1,000)

Fire Flow = 83.3 L/s

The design flows applied in the design of the service connections to the proposed building are calculated as follows:

- Domestic Supply Line (PHD) = 3.3 L/s
- Total Fire Flow (Fire + MDD) = 83.3 L/s + 2.2 L/s = 85.5 L/s

Refer to Appendix C for the detailed calculations.

2.2 Water Service Connections

Based on the above demands, a new 150 mm diameter PVC service connection is proposed to be connected to the existing 300 mm diameter PVC watermain within East Avenue. The service connection will branch from the 150 mm diameter fire line to create a 100 mm diameter domestic supply line at the property per Peel standard drawing 1-6-4. The fire service detector check valve will be installed in the northeast corner of the property line per Peel standard drawing 1-3-1. The domestic service water meter and back-flow preventer will be installed within a mechanical room within the underground parking level.

The Ontario Building Code (clause 3.2.9.7.4) requires that any building above 84 m in height (measured from grade to the ceiling of the upper most occupied floor) be protected by two separate fire service connections separated by an isolation valve. Furthermore, NFPA 14 (clause 7.12.2) classifies buildings greater than 23 m as high-rise and requires a second siamese connection. As previously mentioned, the proposed building is ±27 m in height, therefore one fire service is sufficient, however, a second siamese connection will be required.

There is an existing hydrant opposite the site entrance on East Avenue. This hydrant is within 45 m of the proposed siamese connections and within 90 m of the principal residential entrance to the building. As such the requirements for access for fire protection have been satisfied.

The location of the existing hydrant, and proposed service and siamese connections are shown on the Site Servicing & Grading Exhibits which can be found in Appendix F.

2.3 Domestic and Fire Flow Analysis

The pressure at the building face for each connection is calculated as the residual pressure at the main less the head loss in the supply line. Based on the assumed static pressure and response curve at the existing main, and using the Hazen-Williams formula to determine the head losses in the lines, the resulting residual pressures are summarized in the following table (refer to Appendix C for the detailed calculations):

$$\text{Hazen Williams Formula:} \quad Q = 0.278 \times C \times D^{2.63} \times (H_f / L)^{0.54}$$

Head Loss & Residual Pressure Summary Table

Service Connections	Flow (L/s)	Head Loss (psi)	Head Loss (kPa)	Residual Pressures @ Main (psi/kPa)	Residual Pressures @ Building (psi/kPa)
100 mm Domestic Line (PHD)	3.3	0.0	0.2	86.0/593	86.0/593
150 Fire Line (MDD+Fire)	85.5	4.9	33.6	79.5/548	74.9/514

As shown above, the residual pressures at the building face are expected to be well above the Region's minimum acceptable pressures of 40 psi (275 kPa) under both PHD conditions and Fire + MDD conditions. Furthermore, and as previously mentioned, the Region has recently performed a Servicing Assessment for the subject site in order to ensure that the existing municipal water system can accommodate the proposed increase in population. It was concluded that the existing water infrastructure can support the intensification.

3.0 SANITARY DRAINAGE

Local sanitary infrastructure consists of an existing 250 mm diameter sanitary sewer within Lakeshore Boulevard East, and an existing 250 mm diameter sanitary sewer within Byngmount Avenue. The subject site is currently serviced via an existing 250 mm diameter sanitary service which conveys flows from the existing buildings by gravity in a southwesterly direction and connects to the 250 mm diameter sanitary sewer within Byngmount Avenue. Sanitary flows are then conveyed in a westerly direction to Montbeck Crescent ultimately discharging to the Beach Street Wastewater Pumping Station. Flows are then pumped to the 1,650 mm diameter trunk sewer on Lakeshore Road East via parallel 450 mm and 500 mm diameter forcemains which are located within the aforementioned easements on the west side of the subject site.

3.1 Sanitary Design Criteria

Sanitary design flows for the subject property have been calculated using the Region's design criteria for sanitary sewers. The relevant criteria are summarized below.

- Design Flow: 302.8 Lpcd (residential)
- Peaking Factor: Calculated using the Harmon Formula
- Infiltration Flow: 0.2 L/s/ha
- Population Densities: Varies. See design sheets.

3.2 Foundation Drainage

Per the hydrogeological assessment by WSP Global Inc. (WSP), total suspended solids (TSS), Total Kjeldahl Nitrogen (TKN), total manganese (Mn), and total zinc (Zn) are in exceedance of the Region's limit for discharge to storm sewers whereas only total suspended solids (TSS) exceeds the Region's limit for discharge to sanitary sewers (per the Region of Peel's Sewer By-Law). It is therefore recommended that all dewatering activities be discharged to the sanitary sewer system with pre-treatment for TSS. Please see Appendix D for an excerpt copy of the hydrogeological assessment.

Short Term Groundwater Discharge (construction dewatering)

The anticipated temporary discharge has been calculated by WSP to be 101,000 L/day (1.17 L/s) if no caisson walls are utilized during construction, and 24,000 L/day (0.28 L/s) if caisson walls are chosen. As the method of construction shall be determined at a later date, the worst case construction method (no caisson walls) shall be considered. Furthermore, a dewatering pump will be sized at a later date. It is therefore assumed that a dewatering pump would operate for 6 hours per day, resulting in a maximum groundwater pumping rate of 4.7 L/s.

Long Term Groundwater Discharge (foundation drainage)

The anticipated long-term groundwater discharge has been calculated by WSP to be 23,700 L/day (0.27 L/s). At the time of this report, a groundwater pumping confirmation letter was not made available. It was therefore assumed that the groundwater pump would operate for 4 hours per day resulting in a maximum groundwater pumping rate of 1.6 L/s. The anticipated groundwater pumping rate has been incorporated into the post-development design sanitary flow which is discussed in the subsequent section.

3.3 Sanitary Design Flows

The pre-development flow for the subject site is calculated as follows:

$$Q_{\text{Pre-Dev.}} = \left(\frac{302.8\ \text{Lpcd} \times 108\ \text{pp} \times 4.21_{\text{P.F.}}}{86400\ \text{s/day}}\right) + (0.20\ \text{L/s/ha} \times 0.7482\ \text{ha}) = 2.1\ \text{L/s}$$

The post-development flow for the subject site is calculated as follows:

$$Q_{POST} = \left(\frac{302.8\ \text{Lpcd} \times 334\ \text{pp} \times 4.06\text{P.F.}}{86400\ \text{s/day}}\right) + (0.20\ \text{L/s/ha} \times 0.7482\ \text{ha}) + 1.6\ \text{L/s}3 = 6.5\ \text{L/s}$$

Based on the above, the increase in sanitary flow is calculated to be 4.4 L/s (6.5 L/s – 2.1 L/s). Please refer to Appendix D for the detailed sanitary design sheet.

[3] Anticipated long term groundwater pumping rate.

3.4 Receiving Sanitary Sewer Capacity

As the subject development results in an increase in dry weather flow; it is prudent to check if there are any impacts to the existing downstream sewer system. For the purposes of confirming capacity in the downstream receiving sanitary sewer, typically the "worst case" of following two conditions is considered:

- Short term condition (construction dewatering) = 4.7 L/s
- Long term condition (sanitary flows + foundation drainage) = 6.5 L/s

In this case, the long term condition governs.

As previously mentioned, the Region has prepared a Servicing Assessment for the subject property in order to ensure that the existing municipal sanitary system can accommodate the proposed development. For the purposes of the Servicing Assessment, the Region assumed a maximum 180 units (an increase of 150 units) with an equivalent post-development population of 486 people (an increase of 405 people) based on 2.7 people / unit.

The corresponding increase in flow per the Region's Servicing Assessment is calculated as follows:

$$Q_{REGION} = \left(\frac{302.8\ \text{Lpcd} \times 486\ \text{pp} \times 3.98_{\text{P.F.}}}{86400\ \text{s/day}}\right) + (0.20\ \text{L/s/ha} \times 0.7588\ \text{ha}) = 6.9\ \text{L/s}$$

As shown above, the post-development sanitary flow (including foundation drainage) is less than the flow considered in the Servicing Assessment therefore it is not expected that there will be any constraints to development. The Region, as part of this ZBA/OPA review, will confirm that there are no upgrades required to the receiving sewer system.

The Servicing Assessment noted that the Region's model for the sanitary system has potential for surcharging conditions. That said, the model shows that flows being discharged from the Lakeview Plant Backwash to the Montbeck Creek sewer were lower than expected. Therefore there is capacity for the proposed development.

3.5 Sanitary Service Connection

As previously mentioned, sanitary flows from the subject site are conveyed to the existing 250 mm diameter sanitary sewer within Byngmount Avenue via an existing 250 mm sanitary service. It is proposed however to abandon the existing 250 mm service, and extend the 300 mm sanitary sewer as a new municipal sewer for the potential extension of Byngmount Avenue.

Derived from City plan and profile drawings, the invert of the 250 mm diameter sanitary sewer at the existing manhole is approximately 77.62 m (3.0 m± below surface elevation).

It is proposed to install 84.0 m of 250 mm PVC sanitary sewer at a 1.0% slope, and place a new sanitary manhole. From the new manhole, 7.3 m of 200 mm PVC sanitary service shall be placed at a 2.0% slope resulting in an invert elevation of 78.72 m at the building's control manhole.

As shown below, the proposed service and sewer will easily convey the post-development sanitary flow, operating at only 10.5% (or less) of full flow capacity.

Sanitary Sewer and Service Performance Table

From	To	Pipe Size (mm)	Pipe Slope	Peak Flow (L/s)	Capacity (L/s)	Percent of Full Flow
Building	Prop.MH	200	2.0%	6.5	48.4	13.4%
Prop.MH	Ex.SAN.MH	250	1.0%	6.5	62.0	10.5%

A 1.2 m x 1.2 m cast-in-place control manhole shall be constructed within the underground footprint of the underground parking level. The control manhole lid shall be accessible 24 hours/day for inspection and monitoring, thus satisfying the Region of Peel's Wastewater Bylaw. The sewer invert at the control manhole is adequately deep to service the building by gravity, however, it is noted that the underground level of the building will require pumps to discharge to the sanitary service.

4.0 STORM DRAINAGE

4.1 Overview

Local exclusive storm infrastructure consists of an existing 525 mm diameter storm sewer within Lakeshore Boulevard East, a 450 mm diameter storm sewer within East Avenue, and an existing 375 mm storm sewer within Byngmount Avenue.

It should be noted that site drainage on the site is currently split with a portion draining towards East Avenue and the balance draining southwesterly direction towards an existing drainage swale which get collected in the existing 375 mm storm sewer on Byngmount Avenue. A copy of the City's drainage area map and associated storm sewer design sheet for the existing adjacent residential development confirms that the subject site was taken into account as part of the storm sewer design within Byngmount Avenue (refer to Appendix E). To maintain existing drainage patterns, the proposed stormwater management concept for the development will maintain this drainage split as follows: a smaller area along the east side of the site will continue to sheet drain to East Avenue and the balance of the site will be directed to the storm sewer on Byngmount Avenue.

4.2 Design Criteria

The stormwater management servicing strategy for the subject development has been prepared in accordance with the City and Credit Valley Conservation Authority (CVC) design standards and criteria for the Cawthra Creek Sub-watershed (CCSW). The relevant criteria are summarized below:

Water Quantity Management

- The CCSW requires that the maximum allowable release rate from the site during all storm events, up to and including the 100-year event, must not exceed the flow equivalent to the peak runoff rate generated during a 2-year storm event.
- Discharge to a storm sewer shall not exceed capacity constraints.
- The pre-development runoff coefficient shall not exceed 0.50.
- An overland flow route shall be provided within the developed site to direct runoff in excess of the 100-year storm runoff to an approved overland flow outlet with a maximum of 300 mm ponding within paved areas.

Water Quality Management

- All runoff from the site shall achieve a long-term average removal of 80% of Total Suspended Solids (TSS) on an annual loading basis.

Water Balance Management

- The first 5mm of runoff shall be retained on-site and managed by way of infiltration, evapotranspiration or re-use. Low Impact Development (LID) practices should be explored for implementation.

4.3 Pre-Development Conditions

As previously mentioned, the allowable release rate shall be based on the 2-year pre-development release rates using a maximum runoff coefficient of 0.50. The 2-Year return period design rainfall intensity is calculated as follows:

$$I_2 = \frac{610}{(T+4.6)^{0.78}} = \frac{610}{(15+4.6)^{0.78}} = 59.9 \text{ mm / hr}$$

The corresponding allowable peak flows from the subject site are calculated as follows:

$$Q_{\text{2-Year Pre-East}} = \frac{(A \times R) \times I_2}{360} = \frac{(0.1542 \text{ ha} \times 0.50) \times 59.9 \text{ mm / hr}}{360} \times \left(\frac{1000 \text{ L}}{\text{m}^3}\right) = 12.8 \text{ L/s}$$

$$Q_{\text{2-Year Pre-West}} = \frac{(A \times R) \times I_2}{360} = \frac{(0.6036 \text{ ha} \times 0.35) \times 59.9 \text{ mm / hr}}{360} \times \left(\frac{1000 \text{ L}}{\text{m}^3}\right) = 35.6 \text{ L/s}$$

The allowable site discharge from the subject site to the sewer system within East Avenue shall be limited to **12.8 L/s** (note that the estimated runoff coefficient for the area sheet draining to East Avenue is calculated as 0.56 which results in an actual 2-year flow of 14.4 L/s). The allowable site discharge from the subject site to the sewer system within Byngmount Avenue shall be limited to **35.6 L/s**. Please refer to the detailed storm sewer design sheet which can be found in Appendix E.

It is noted that the storm drainage plan and corresponding storm design sheet (both sourced from the City) demonstrate that the receiving storm sewer within Byngmount Avenue was sized to accommodate storm flows from and area of 0.67 ha with a runoff coefficient of 0.60. As such the allowable discharge from the subject site to the Byngmount Avenue storm sewer is calculated as follows:

$$Q_{\text{2-Year Byngmount}} = \frac{(A \times R) \times I_2}{360} = \frac{(0.67 \text{ ha} \times 0.60) \times 59.9 \text{ mm / hr}}{360} \times \left(\frac{1000 \text{ L}}{\text{m}^3}\right) = 66.9 \text{ L/s}$$

The stormwater management concept for the development will be designed to respect this discharge rate which is what the downstream storm sewer system was designed for.

As shown on the Pre-Development Storm Drainage Plan (refer to Appendix E), there is an area north of the subject site which is conveyed through the property via an existing 375 mm sewer connected to ditch inlet catchbasins on either side. This sewer collects runoff from the northern external area and conveys it to the swale along the future Byngmount Avenue extension south of the development lands. To maintain existing drainage conditions, this sewer will remain in place thereby ensuring that no external drainage needs to be collected or conveyed through the proposed stormwater management system for the development.

4.4 Water Quantity Management

The post-development hydrologic conditions for the site were established using the City's design standards, which include the 2-year and 100-year IDF data, a time of concentration of 15 minutes, and the following storm drainage run-off coefficients:

Runoff Coefficients	
Bare Roof	0.90
Green Roof	0.45
Landscaped Areas	0.25
Permeable Pavers	0.55
Hard Surfaces	0.90

These design parameters are used in the subsequent sections to determine the on-site storage requirements to meet the target release rate for the site.

The 100-Year return period design rainfall intensity is calculated per City standards as follows:

$$I_{100} = \frac{1450}{(T+4.9)^{0.78}} = \frac{1450}{(15+4.9)^{0.78}} = 140.7 \text{ mm / hr}$$

Due to grading constraints, a portion of the subject site will continue to sheet drain uncontrolled to East Avenue under post-development conditions. The corresponding 100-Year post-development peak un-attenuated flows from the site are calculated as follows:

$$Q_{100\text{-East}} = \frac{(A \times R) \times I_{100}}{360} = \frac{(0.0273 \text{ ha} \times 0.77) \times 140.7 \text{ mm / hr}}{360} \times \left(\frac{1000 \text{ L}}{\text{m}^3}\right) = 8.3 \text{ L/s}$$

$$Q_{100\text{-West}} = \frac{(A \times R) \times I_{100}}{360} = \frac{(0.7304 \text{ ha} \times 0.70) \times 140.7 \text{ mm / hr}}{360} \times \left(\frac{1000 \text{ L}}{\text{m}^3}\right) = 201.1 \text{ L/s}$$

As shown above, the 100-year post-development design flow to East Avenue (8.3 L/s) is less than the allowable 2-year pre-development flow of 12.8 L/s, therefore no further attenuation is required.

The unattenuated 100-year post-development design flow to Byngmount Avenue (201.1 L/s) is significantly larger than the allowable 2-year pre-development flow (35.6 L/s), therefore on-site storage will be required.

To attenuate flows, typically a combination of roof top, surface and/or underground storage can used to temporarily store the required volumes and reduce peak flows to the receiving storm sewer system. In this case, an underground storage tank is proposed to contain flows generated from the subject site, up to, and including the 100-year storm event. All runoff collected on the site will be directed to the underground stormwater tank and will be released at a controlled rate at or below the calculated allowable discharge. Since the site is currently serviced by a swale along the south side of the property, it is proposed that the SWM the tank be discharged to this swale, which ultimately get captured in the existing storm sewer on Byngmount Avenue.

It should be noted that due to grading constraints and to preserve existing trees in the area, a portion of the site along the western property line cannot be collected in the stormwater tank. This area will be maintained in its current state and will be allowed to continue sheet draining southwesterly to the storm sewer on Byngmount Avenue. This uncontrolled sheet flow will be deducted from the allowable discharge rate from the stormwater tank to ensure the design criteria are met. The uncontrolled flow is calculated as follows:

$$Q_{\text{Uncontrolled}} = \frac{(A \times R) \times I_{100}}{360} = \frac{(0.00702 \text{ ha} \times 0.25) \times 140.7 \text{ mm / hr}}{360} \times \left(\frac{1000 \text{ L}}{\text{m}^3}\right) = 6.9 \text{ L/s}$$

Therefore the allowable release rate from the stormwater management tank is therefore **28.7 L/s** (35.6 L/s – 6.9 L/s).

4.4.1 Underground Storage

To attenuate flows from the site, an underground stormwater storage tank is proposed along the west side of the underground parking structure. All storm run-off generated on the site will be collected and directed to the proposed tank. Due to the shallow nature of the existing swale along the south side of the property, a gravity service connection from the tank is not possible, as such a pump is proposed to discharge stored water from the tank at the allowable release rate. Utilizing a Barnes 3SE-L pump with a 6.5" impeller (refer to the detailed specifications in Appendix E), a tank footprint area of 75.9 m², and a 100-Year storage depth of 2.41 m, the pumped discharge rate from the tank is calculated to be 27.0 L/s. The orifice discharge rate and corresponding storage requirements are summarized as follows:

SWM Tank Storage Requirements

	2-Year	10-Year	100-Year
Allowable SWM Tank Release Rate	28.7 L/s	28.7 L/s	28.7 L/s
Pumped Release Rate	24.7 L/s	25.7 L/s	27.0 L/s
Storage Depth	0.70 m	1.48 m	2.41 m
Total Pump Head	2.30 m	1.52 m	0.59 m
Tank Storage Required	53.5 m³	112.1 m³	183.3 m³
Tank Storage Provided	197.5 m³	197.5 m³	197.5 m³

Refer to Appendix E for a copy of the detailed storage calculations and the pump specification.

4.4.2 Overall Quantity Control

A schematic representation of the stormwater management system under 100-year conditions is provided below:

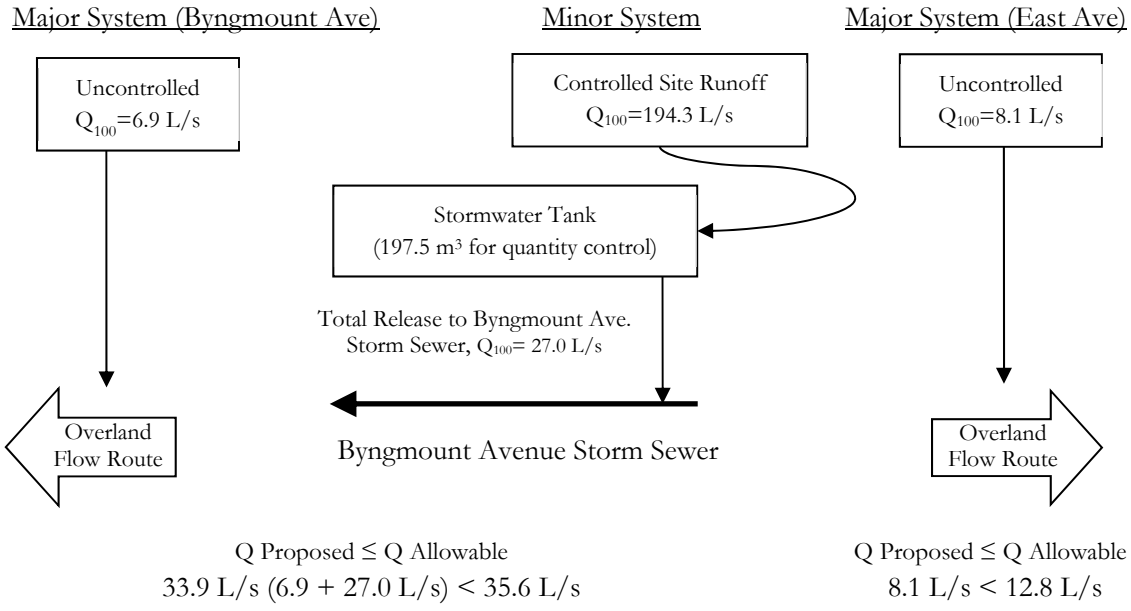

By providing on-site storage via an underground stormwater storage system with a controlled discharge release rate to the receiving sewer, the subject site satisfies the City's stormwater management objectives.

4.4.3 Maintenance & Operation Considerations

It is important to note that regular maintenance inspections of the tank, sewers and pumps should be conducted to ensure that there are no blockages or other conditions which would prevent the proper functioning of the stormwater management system. The recommended minimum frequency of such inspections is annually.

Although the tank is designed to allow overflow to the surface in the event of pump failure, it is recommended that two pumps be installed in the tank to provide redundancy. The pump logic should be designed to alternate between the two pumps to extend the life of both and reduce the risk of either pump ceasing due to infrequent usage. In addition, we recommend that the system be equipped with an automated backup power supply that is dedicated to this system (i.e., with no other loads). The building owner should develop a checklist and protocols for routine inspections to be carried out at appropriate intervals, including testing of all equipment and controls.

4.5 Water Quality Management

Pursuant to the City's design criteria, stormwater quality controls are required to be implemented on-site to achieve Enhanced Level 1 Protection (i.e. 80% TSS removal). Based on the above considerations, the following chart summarizes the subject site's inferred TSS removal rate:

Inferred Water Quality Summary

Site Area	Area (m^2)	% of Total	TSS Removal Rate	Overall
Bare Roof	1,288	17.0%	95%	16.2%
Green Roof	800	10.6%	100%	10.6%
Landscape	1,697	22.4%	100%	22.4%
Hard Surfaces	3,792	47.1%	0%	0.0%
Total	7,577	100%		**49.2%**

In order to achieve the required TSS removal targets, the subject site requires supplemental treatment. Therefore a Contech Media Filter System is proposed to be installed within an off-line chamber within the tank out to treat the stormwater runoff from the site (i.e. surface landscape, walkway and pavement areas). The system is acknowledged by Credit Valley Conservation Authority (CVC) and the City to achieve the minimum 80% TSS removal rate. We note that the manufacturer's modelling shows that the filter chamber with the 80 MFS cartridges will achieve 80% TSS removal for 90% of captured runoff and the peak flow rate before by-pass within the unit is 14.2 L/s (15 usgpm x 15 cartridges). A copy of the sizing report by Contech is included in Appendix E for reference.

Based on the proposed supplemental treatment, the following table summarizes the site's TSS removal rate:

Achieved Water Quality Summary

Site Area	Area (m^2)	% of Total	TSS Removal Rate	Overall
Bare Roof	1,359.5	17.9%	95%	17.0%
Green Roof	800.4	10.6%	100%	10.6%
Landscape	754.4	10.0%	100%	10.0%
Hard Surfaces (to East Ave, no treatment)	216.5	2.9%	0%	0%
Treatment Area	4,446.6	58.7%	80%[4]	46.9%
Total	7,577.4	100%		**84.5%**

Per manufacturer specifications, it is recommended that the MFS Filter System be inspected on a regular basis to confirm proper operation as well as to check for the accumulation of oil and sediment in the system. Per Contech's recommendations, maintenance should be carried out at an interval of 6 months with quarterly inspections until enough historical data has been collected to ensure that the unit is functioning properly. A licensed waste management company should be engaged to inspect, maintain, and remove and responsibly dispose of any captured sediment, debris, and petroleum waste products accumulated in the unit.

Based on the MFS Treatment Unit specifications the proposed design meets the City and CVC water quality targets.

4.6 Water Balance Management

In order to promote preservation of the site's natural hydrological water balance, the City and CVC require a minimum volume of 5 mm over the total site area be retained. The total water balance volume required to be detained is calculated as follows:

- Volume Required = $A_{Site} \times 5$ mm
- Volume Required = 7,578 $m^2 \times 5$ mm /(1000 mm/m) = 37.9 m^3

Based on initial abstraction rates for the site surfaces, the total abstraction is calculated as follows:

Initial Abstraction Table

Site Area	Area (m^2)	% of Total	Initial Ab. for Each Area	Total Initial Ab. (m^3)
Bare Roof	1,359.5	17.9%	1 mm	0.2 m^3
Green Roof	800.4	10.6%	5 mm	0.5 m^3
Landscape	754.4	10.0%	5 mm	0.5 m^3
Permeable Pavers	0	0.0%	5 mm	0.0 m^3
Hard Surfaces	4,663.1	61.5%	1 mm	0.6 m^3
Total	7,577.4	100%		**1.8 m^3**

After a thorough review of the Low Impact Development Stormwater Management Planning and Design Guide (hereinafter referred to as the "LID Guide"), the most feasible methods of meeting the required water balance objectives are through a combination of rainwater harvesting and

[4] Surface pavement and landscape areas directed the MFS filter chamber for treatment upstream of the main SWM tank.

groundwater infiltration. It is proposed that stormwater be captured and stored within a sump located in the stormwater management tank and will be used for irrigation purposes.

The following is a summary of the water balance achieved:

Water Balance Summary

Water Balance Uses	Volumes
Initial Abstraction	1.8 m^3
Landscape Irrigation	38.0 m^3
Total	**39.8 m^3**

By retaining the required 5 mm volume on-site, the City's requirements with respect to water balance have been satisfied. The detailed design sheets can be found in Appendix E. Additional details pertaining to the infiltration gallery and irrigation system will be provided at the Site Plan Application stage.

4.7 Storm Service Connection

From the new manhole, 14.6 m of new 250 mm PVC storm service shall be installed at a 1.0% gradient resulting in an invert elevation of 79.70 m at the storm control manhole. As shown below, the proposed service can easily convey the attenuated post-development storm flow operating at 44% of full flow capacity.

Storm Service Performance Table

From	To	Pipe Size (mm)	Pipe Slope	Peak Flow (L/s)	Capacity (L/s)	Percent of Full Flow
Control MH	Prop.MH1	250	1.0%	25.9	59.5	44%

Please refer to Appendix E for the detailed design calculations.

4.8 Emergency Overflow

All building roof areas shall be provided with rooftop scuppers which will ensure a safe emergency overflow should the rooftop drains become blocked or clogged. The areas surrounding the perimeter of the buildings have been designed with positive drainage (away from building).

To provide a relief point within the underground system, the stormwater management tank shall be fitted with an emergency overflow catchbasin (open grate) lid, located within the subject site at street-line at the east side of the property. Should the property experience a storm greater than the 100-year event or should the orifice become clogged, surplus water will overflow through the catchbasin grate (elevation is 82.10 m), and spill to the south and eventually to the Byngmount Avenue right-of-way.

It is recommended that all other incoming pipes to the tank be fitted with one-way flap gate valves (i.e. backflow preventers) to prevent surcharging in the building's plumbing system. The location and details pertaining to the safety overflow are shown on the Site Servicing & Grading Exhibits.

4.9 Sediment and Erosion Control

In accordance with the Erosion and Sediment Control (E&SC) Guidelines for Urban Construction, temporary erosion and sediment control measures are required for any development application.

To mitigate potential environmental impacts from sediment pollution, it is proposed that a sediment control fence be installed along the entire perimeter of the site. Any existing and proposed catch basins shall be protected with a Terrafix 360R geotextile fabric (or approved equal), and a mud mat shall be installed in the northwest corner to prevent any mud tracking onto the municipal roads.

4.10 Sustainable & Low-Impact Development (LID) Alternatives

To limit the impact of the development to the natural environment several LID measures are proposed for this development. As noted in section 4.5, water quality targets have been achieved through a combination of green roof, landscaping, and permeable pavers.

Furthermore as noted in section 4.6, water balance targets for this development have been achieved through the implementation of an infiltration gallery to promote groundwater infiltration, and by storing stormwater in the sump of the stormwater management tank which will be used for landscape irrigation.

5.0 CONCLUSIONS

This letter report illustrates that the proposed development is feasible from municipal servicing and stormwater management perspectives.

Proposed fire and domestic water demands are within acceptable ranges and can be accommodated by the existing municipal water supply network as confirmed by the Region of Peel.

The receiving sanitary sewer network within Byngmount Avenue can accommodate the subject site without improvements as confirmed by the Region of Peel.

The proposed internal storm sewer network, on-site storage, and the controlled discharge release rate are at appropriate levels and therefore the subject site satisfies the City's stormwater management objectives.

We trust that this satisfies your current needs. Should you have any questions, or require additional information, please do not hesitate to contact the undersigned.

Respectfully Submitted,

fabian papa & partners
A Division of FP&P HydraTek Inc.

Robert Filipuzzi, P.Eng.
PEO Designated Consulting Engineer
Partner

Tel: +1.905.264.2420 x440
E-Mail: rfilipuzzi@fabianpapa.com

h:\fp&p hydratek\projects\2019\19002 - 958-960 east avenue, mississauga\report\re-zoning\revision 1 - (version 1)\19002 - fs and swm report (revision 1).docx

APPENDIX A

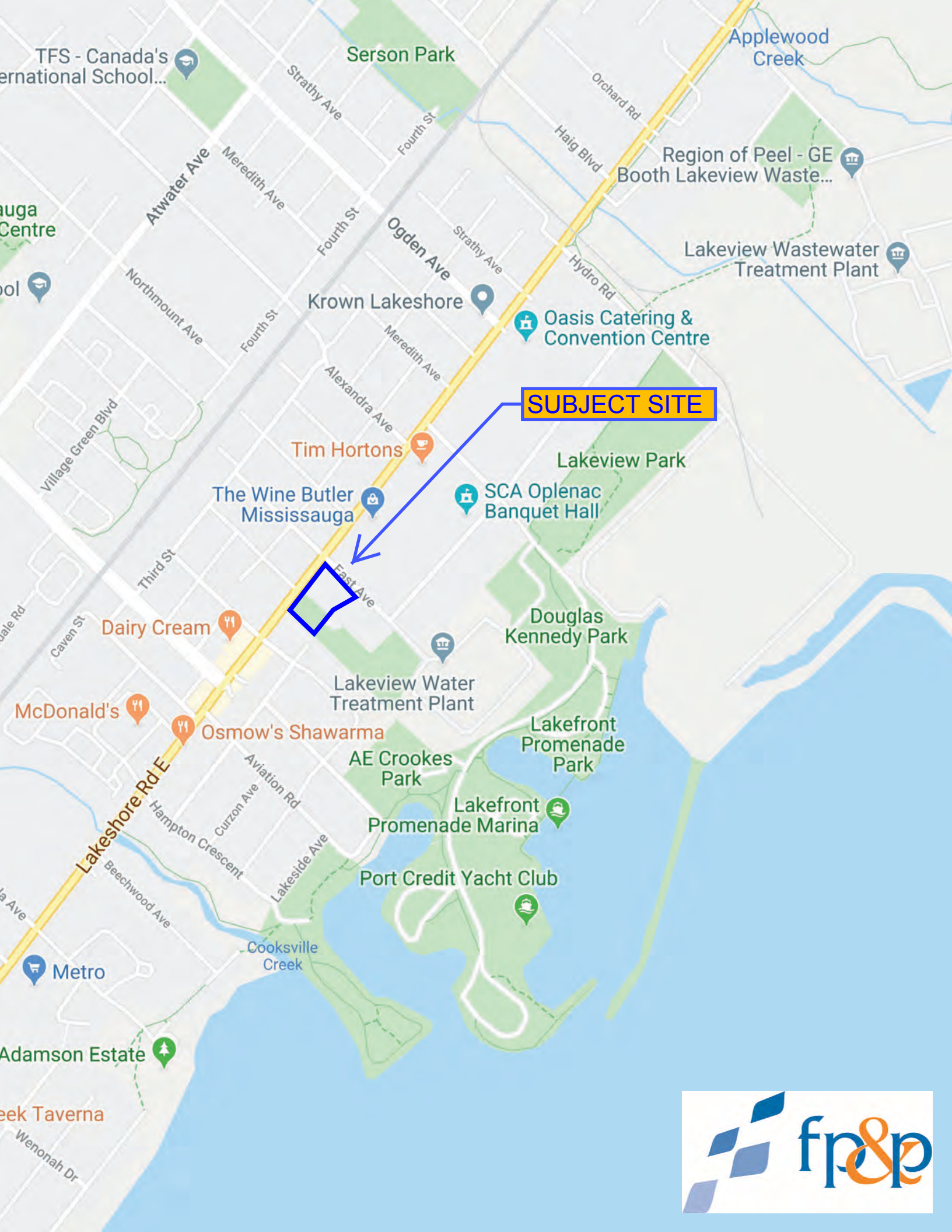
SUBJECT SITE
TFS - Canada's ernational School...
Serson Park
Applewood Creek
Strathy Ave
Orchard Rd
Haig Blvd
Region of Peel - GE Booth Lakeview Waste...
Atwater Ave
Meredith Ave
Fourth St
Ogden Ave
auga Centre
Lakeview Wastewater Treatment Plant
Hydro Rd
Northmount Ave
Krown Lakeshore
Oasis Catering & Convention Centre
Alexandra Ave
Village Green Blvd
Tim Hortons
Lakeview Park
The Wine Butler Mississauga
SCA Oplenac Banquet Hall
Third St
East Ave
Dairy Cream
Douglas Kennedy Park
Caven St
Lakeview Water Treatment Plant
McDonald's
Osmow's Shawarma
Lakefront Promenade Park
AE Crookes Park
Aviation Rd
Curzon Ave
Hampton Crescent
Lakefront Promenade Marina
Lakeshore Rd E
Lakeside Ave
Beechwood Ave
Port Credit Yacht Club
Cooksville Creek
Metro
Adamson Estate
Wenonah Dr

West Ave
Lakeshore Rd E
SUBJECT SITE
Montbeck Crescent
East Ave
Land Conveyance to Region
Land Conveyance to Peel Housing Corporation

958-960 East Avenue
Mississauga, ON

for PEEL HOUSING CORPORATION

PROJECT 19006
DATE XXX

REISSUED FOR: OPA/REZONING

ARCHITECTURAL DRAWINGS

- ☑ A000 COVER PAGE
- ☑ A100 SITE PLAN
- ☑ A101 PARKING PLAN P1
- ☑ A201 GROUND FLOOR PLAN
- ☐ A202 SECOND FLOOR PLAN
- ☐ A203 THIRD FLOOR PLAN
- ☐ A204 FOURTH FLOOR PLAN
- ☐ A205 FIFTH FLOOR PLAN
- ☐ A206 SIXTH/SEVENTH FLOOR PLAN
- ☐ A207 MECH. PENTHOUSE PLAN
- ☐ A208 ROOF PLAN
- ☑ A401 ELEVATIONS
- ☑ A402 ELEVATIONS
- ☑ A501 SECTIONS
- ☑ A502 SECTIONS

PROJECT CONSULTANTS

STRUCTURAL ENGINEER
BLACKWELL
134 Peter Street, Suite 1301
Toronto, Ontario M5V 2H2
(416) 593-5300

MECHANICAL ENGINEER
SMITH + ANDERSEN
100 Sheppard Ave E
North York, Ontario M2N 6N5
(416) 487-8151

ELECTRICAL ENGINEER
SMITH + ANDERSEN
100 Sheppard Ave E
North York, Ontario M2N 6N5
(416) 487-8151

LANDSCAPE ARCHITECT
MARTON SMITH LANDSCAPE ARCHITECTS INC. (MSLA)
170 The Donway West, Suite 206
North York, Ontario M3C 2G3
(416) 492-9966

CIVIL ENGINEER
FABIAN PAPA & PARTNERS
216 Chrislea Road, Suite 204
Vaughan, Ontario L4L 8S5
(416) 492-9966

405-317 ADELAIDE STREET WEST
TORONTO CANADA M5V 1P9
+1 416 599 9729
WWW.RAWDESIGN.CA

This drawing is the property of the Architect and is not to be reproduced or used without the express consent of the Architect. The Contractor is responsible for checking and verifying all levels and dimensions and shall report discrepancies to the Architect and obtain clarification prior to commencing work.

ISSUED RECORD

2020.03.27 • ISSUED FOR OPA/RZ
2020.05.26 • REISSUED FOR OPA/RZ
2020.07.15 • REISSUED FOR OPA/RZ

REVISION RECORD

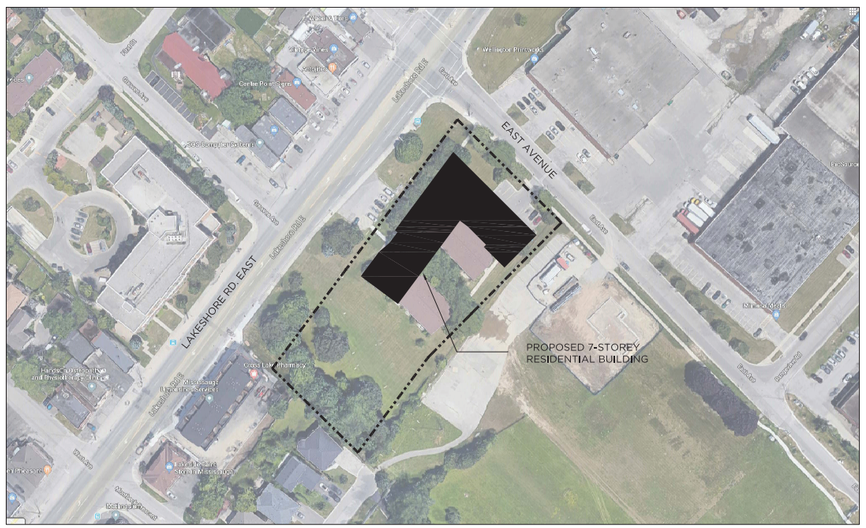

2 CONTEXT PLAN
SCALE N/A

405-317 ADELAIDE STREET WEST
TORONTO CANADA M5V 1P9
+1 416 599 9729 WWW.RAWDESIGN.CA

19006 - 958 East Avenue Mississauga
4/16/2021

Official Plan	Mixed Use
Avenue Width	44M
Current Zoning	

Gross Site Area	7,804 m2	84,001	ft2
Landscape Area	1,025 m2	11,033	ft2
Part 6	202 m2	2,174	ft2
Part 7	215 m2	2,314	ft2
Part 8	107 m2	1,152	ft2
Net Site Area	6,659 m2	71,677	ft2

	UNITS					GCA		EXCLUSIONS*		GFA (SM)	
	Floor	1B	2B	3B	Total	sm	sf	sm	sf		sf
	1	3	6	0	9	2,069	22,271	875	9,419	1,194	12,853
	2	11	11	2	24	2,136	22,992	60	646	2,076	22,347
	3	11	11	2	24	2,159	23,240	60	646	2,099	22,594
	4	11	11	2	24	2,137	23,003	60	646	2,077	22,357
	5	11	11	2	24	1,893	20,377	60	646	1,833	19,731
	6	9	12	2	23	1,893	20,377	60	646	1,833	19,731
	7	9	12	2	23	1,893	20,377	60	646	1,833	19,731
TOTAL	Totals	65	74	12	151	14,180	152,637	1235	13,294	12,945	139,343

*As per zoning definitions for residential zones

FSI Residential 1.94

AMENITY	REQUIRED	PROVIDED
Indoor	422.8	654
Outdoor	422.8	671
Total	845.6	1325

REQUIRED PARKING				
RESIDENT	65	74	12	151
VISITOR	16.25	18.5	3	37.75
TOTAL				189

PROPOSED PARKING	GB	P1	P2	TOTAL
RESIDENT	15	104	0	119
VISITOR	35	0	0	35
Total				154

ACCESSIBLE PARKING

REQUIRED	6	(4% Total Parking Provided)
PROVIDED	6	

CMHC REQUIRED	13	14.8	2.4	30.2	20%
CMHC PROVIDED	15	15	3	33	20.2%

1 SITE STATS
SCALE N/A

NORTH

405-317 ADELAIDE STREET WEST
TORONTO CANADA M5V 1P9
+1 416 599 9729
WWW.RAWDESIGN.CA

19006

958-960 EAST AVE,
MISSISSAUGA

REGION OF PEEL

COVER PAGE

1:100

A000

O:\19006 958 East Avenue Mississauga Drawings\Current\19006 958 East Ave Mississauga_ArchitecturalDrawings 20201026.dwg / Sunday, April 18, 2021 8:58:48 PM

SITE PLAN INFORMATION TAKEN FROM :

PART OF SURVEY OF
PART OF LOTS 9 AND 10
CONCESSION 3
SOUTH OF DUNDAS STREET
(FORMERLY TOWNSHIP OF TORONTO,
COUNTY OF PEEL)
CITY OF MISSISSAUGA
REGIONAL MUNICIPALITY OF PEEL
YOUNG & YOUNG SURVEYING INC.
ONTARIO LAND SURVEYORS
MARCH 15, 2016

LEGEND

- 78.53 EXISTING ELEVATION
- 110.50 PROPOSED ELEVATION
- 110.60 T.O.S. TOP OF STRUCT
- 190.55 T.O.W. TOP OF WALL
- 110.50 T.O.C. TOP OF CURB
- 110.50 T.O.R. TOP OF ROOF
- VEHICULAR EXIT/ENTRANCE
- PEDESTRIAN EXIT/ENTRANCE
- PRIMARY RES ENTRANCE
- EXISTING EXTERIOR TO REMAIN
- EXISTING EXTERIOR AND INTERIOR TO REMAIN
- NEW WALLS
- ITEM ABOVE
- S SCREEN REF. #
- W WALL TYPE
- D DOOR REF #

Notes:
Refer to consultants drawings for information relating to Site Servicing, Grading and Landscape.
All items new construction unless noted as Existing.

Abbreviations

AD	Area Drain
CACF	Central Alarm and Control Facility
CB	Catch Basin
FH	Fire Hydrant
FD	Floor Drain
HB	Hose Bib
HLP	Hydro Light Pole
MH	Man Hole
TLS	Traffic Light Standard
TOS	Top of Structure
TOW	Top of Wall
TPZ	Tree Protection Zone

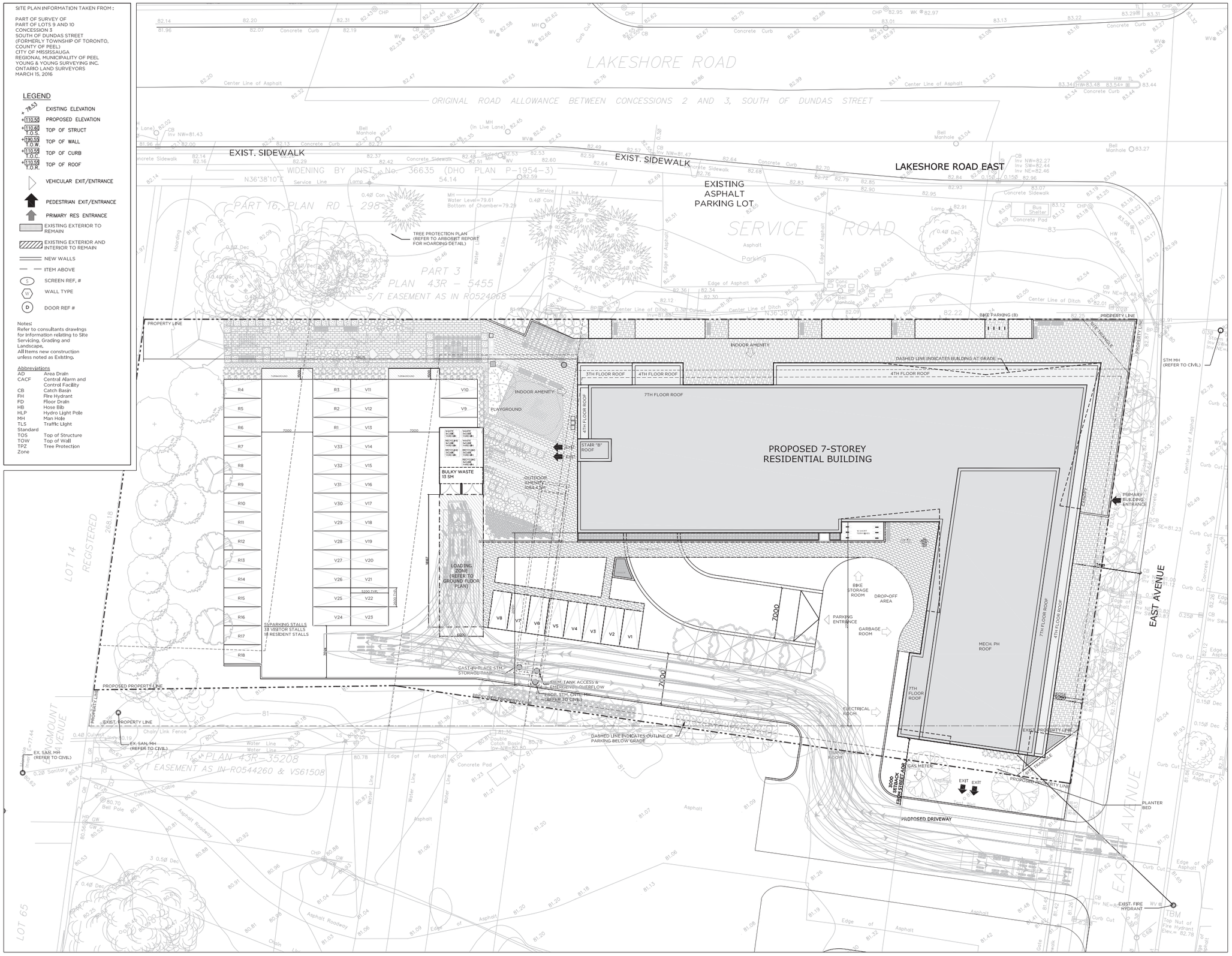

This drawing is the property of the Architect and may not be reproduced or used without the express consent of the Architect. The Contractor is responsible for checking and verifying all levels and dimensions and shall report all discrepancies to the Architect and obtain clarification prior to commencing work.

ISSUED RECORD

2020.03.27 • ISSUED FOR OPA/RZ
2020.05.26 • REISSUED FOR OPA/RZ

REVISION RECORD

NORTH

RAW

405-317 ADELAIDE STREET WEST
TORONTO CANADA M5V 1P9
+1 416 599 9729
WWW.RAWDESIGN.CA

PLAN

958-960 EAST AVE.
MISSISSAUGA

REGION OF PEEL

SITE PLAN

1:150

A100

TREE PROTECTION PLAN
(REFER TO ARBORIST REPORT FOR HOARDING DETAIL)

LOADING ZONE

- MIN. 9M STRAIGHT HEAD-ON APPROACH TO COLLECTION POINT, APPROACH IS TO BE LEVEL, WITH A MAX. 2% SLOPE.
- MIN. CLEAR HEIGHT OF 7.5M FROM THE CONCRETE PAD MUST BE FREE OF OBSTRUCTIONS.
- MAX. GRADE PERMITTED ALONG THE WASTE COLLECTION VEHICLE ACCESS ROUTE IS 8%.
- MATERIAL ROADWAYS MUST BE CONSTRUCTED OF A HARD SURFACE MATERIAL SUCH AS ASPHALT OR CONCRETE, DESIGNED TO SUPPORT A MINIMUM OF A 35 TONNE FULLY-LOADED WASTE COLLECTION VEHICLE.
- ADEQUATE LIGHTING DURING PERSON IS TO ENSURE SAFE BACK-UP MANEUVER.
- SIGNAGE POSTED TO INDICATE USE AND LOCATION.

WASTE 3-CUBIC YARD BIN
RECYCLING 3-CUBIC YARD BIN
CONCEALED COLLECTION POINT
BULKY WASTE 13 SM
OUTDOOR PATIO 166.4 SM
INDOOR AMENITY
PLANTING BED
PARTY ROOM 74.0 SM 796.7 SFT
MULTI-PURPOSE 140.1 SM 1507.8 SFT
LAUNDRY 50 SM 540 SFT
FITNESS ROOM 78.8 SM 848.3 SFT
LOUNGE/SEATING AREA 198.4 SM 2135.3 SFT
DASHED LINE INDICATES EXTENTS OF PARKING BELOW
PUBLIC CORRIDOR 263.8 SM 2732 SFT
BUILDING ENTRANCE LOBBY 15.4 SM 165 SFT
LOBBY VEST. "B" 19.9 SM 214.2 SFT
LOBBY VEST. "A" 18.2 SM 195.7 SFT
PROPERTY RIGHT 17.5 SM 187.5 SFT
OFFICE #2 12.5 SM 135 SFT
CACF 8.3 SM 89 SFT
JAN. RM
STAIR "C"
STAIR "A"
LONG TERM BICYCLE ROOM 27 BIKES 33.5 SM 360 SFT
REAR LOADING MAIL
UNIVERSAL W/R
MOVING 8M, 17.4 SM
COMPACTOR AND RECYCLING ROOM 127.8 SM 1375 SFT
THREE SEPARATE CHUTES FOR WASTE COLLECTION
GARBAGE AND RECYCLING 10.4.5 SM 1125 SFT
BIKE PARKING (8)
PROPERTY LINE
SITE TRIANGLE
STM MH (REFER TO CIVIL)
BIKE STORAGE ROOM
DROP-OFF AREA
PARKING ENTRANCE
GARBAGE ROOM
ELECTRICAL ROOM 42.0 SM 452 SFT
ELECTRICAL ROOM
ALECTRA TRANSFORMER VAULT 81.0 SM 872 SFT
BULKY WASTE GARB. ROOM 9.05 SM 98.32 SFT
PRIMARY BUILDING ENTRANCE
PLANTER BED
EXIST. PROPERTY LINE
PROPOSED PROPERTY LINE
PROPOSED DRIVEWAY
3000 SETBACK FROM STREET A.O.R.
EAST AVENUE
CURTAIN PLACE STM STORAGE TANK
WASHED LINE INDICATES EXTENTS OF STORAGE BELOW
STORM TANK ACCESS & EMERGENCY OVERFLOW
PROP. STM. CONC. MH (REFER TO CIVIL)
INTAKE
GAS METER
TRANSFORMER
Chain Link Fence
Concrete Pad
Double Catch Basin Inv NW=80.80
Inv=81.88
Center Line of Ditch
0.40Ø Conc
0.30Ø Storm Inv NE=81.48
0.25Ø Inv SW=82.13
0.15Ø Dec
CB Inv NW=81.48
CB Inv SW=81.00
CB Inv SW=81.12
DCB Inv SE=81.27
Water Line
Edge of Asphalt
Curb Cut
Concrete Curb
Edge of Asphalt
Asphalt
Parking
SERVICE ROAD
Hydro Pole
Hydro Vault
Hydro Box
Hydro Meter
Gas Valve
Gas Meter
Bell Box
Bell Pedestal
Bell Manhole
Bell Vault
Traffic Light
Traffic Control Box
Traffic Sign
Light Standard
Fire Hydrant
Sanitary Manhole
Storm Manhole
Catch Basin
Deciduous Tree
Coniferous Tree
Shrub
Bush
Hedge
Fence
Guide Rail
Retaining Wall
Concrete Wall
Concrete Pad
Concrete Curb
Curb Cut
Edge of Asphalt
Asphalt
Water Line
Center Line of Asphalt
Center Line of Ditch
Inv=81.88
Inv=81.81
N=4533507.068
E=313810.968
N=4533507.068
E=313810.968
N33°38'10"E
BP
Hydro Pole
Hydro Vault
Hydro Box
Hydro Meter
Gas Valve
Gas Meter
Bell Box
Bell Pedestal
Bell Manhole
Bell Vault
Traffic Light
Traffic Control Box
Traffic Sign
Light Standard
Fire Hydrant
Sanitary Manhole
Storm Manhole
Catch Basin
Deciduous Tree
Coniferous Tree
Shrub
Bush
Hedge
Fence
Guide Rail
Retaining Wall
Concrete Wall
Concrete Pad
Concrete Curb
Curb Cut
Edge of Asphalt
Asphalt
Water Line
Center Line of Asphalt
Center Line of Ditch
Inv=81.88
Inv=81.81
N=4533507.068
E=313810.968
N=4533507.068
E=313810.968
N33°38'10"E
BP

This drawing is the property of the Architect and is not to be reproduced or used without the express consent of the Architect. The Contractor is responsible for checking and verifying all field conditions and shall report any discrepancies to the Architect and obtain clarification prior to commencing work.

ISSUED RECORD

2020.03.27 - ISSUED FOR OPA/RZ
2020.05.26 - REISSUED FOR OPA/RZ

REVISION RECORD

NORTH

RAW
405-317 ADELAIDE STREET WEST
TORONTO CANADA M5V 1P9
+1 416 599 9729
WWW.RAWDESIGN.CA

958-960 EAST AVE, MISSISSAUGA

REGION OF PEEL

GROUND FLOOR PLAN

1:100

A201

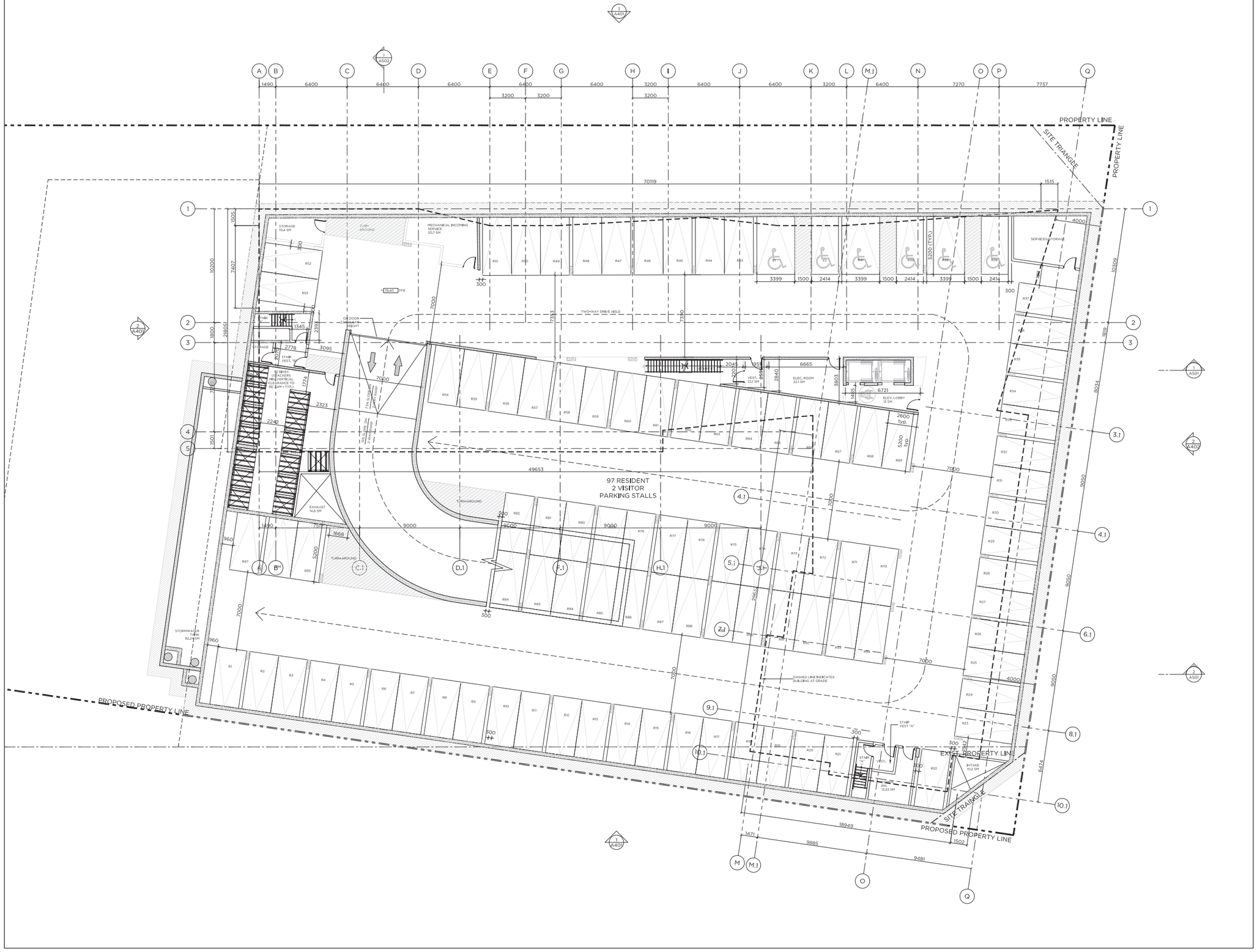

This drawing is the property of the Architect and is not to be reproduced or used without the express consent of the Architect. The Contractor is responsible for checking and verifying all local conditions and shall report any discrepancies to the Architect and obtain clarification prior to commencing work.

ISSUED RECORD

2020.03.27 • ISSUED FOR OPA/RZ
2020.05.26 • REISSUED FOR OPA/RZ

REVISION RECORD

NORTH

RAW
405-317 ADELAIDE STREET WEST
TORONTO CANADA M5V 1P9
+1 416 599 9729
WWW.RAWDESIGN.CA

19006

MISSISSAUGA
958 EAST AVE

REGION OF PEEL

PARKING LEVEL P1

1:100

A101

405–317 ADELAIDE STREET WEST
TORONTO CANADA M5V 1P9
+1 416 599 9729 WWW.RAWDESIGN.CA

19006 - 958 East Avenue Mississauga

4/22/2021

Official Plan	Mixed Use
Avenue Width	44M
Current Zoning	

Gross Site Area	7,804	m2	84,001	ft2	
Landscape Area	912	m2	9,817	ft2	
Part 6	202	m2	2,174	ft2	lands to be transferred to the PHC from the Region of Peel
Part 7	215	m2	2,314	ft2	lands to be conveyed to the City of Mississauga
Part 8	107	m2	1,152	ft2	lands to be conveyed to the City of Mississauga
Net Site Area	7,482	m2	80,535	ft2	Excludes Parts 7 and 8

UNITS				
Floor	1B	2B	3B	Total
1	3	6	0	9
2	11	11	2	24
3	11	11	2	24
4	11	11	2	24
5	11	11	2	24
6	9	12	2	23
7	9	12	2	23
Totals	65	74	12	151

	GCA		EXCLUSIONS*		GFA (SM)	
	sm	sf	sm	sf		sf
	2,069	22,271	875	9,419	1,194	12,853
	2,136	22,992	60	646	2,076	22,347
	2,159	23,240	60	646	2,099	22,594
	2,137	23,003	60	646	2,077	22,357
	1,893	20,377	60	646	1,833	19,731
	1,893	20,377	60	646	1,833	19,731
	1,893	20,377	60	646	1,833	19,731
TOTAL	14,180	152,637	1235	13,294	12,945	139,343

*As per zoning definitions for residential zones

FSI Residential	1.73

AMENITY	REQUIRED	PROVIDED
Indoor	422.8	654
Outdoor	422.8	551
Total	845.6	1205

REQUIRED PARKING

RESIDENT	65	74	12	151
VISITOR	16.25	18.5	3	37.75
TOTAL				189

ACCESSIBLE PARKING

REQUIRED	6	(4% Total Parking Provided)
PROVIDED	6	

PROPOSED PARKING	GR	P1	P2	TOTAL
RESIDENT	18	97	0	115
VISITOR	33	2	0	35
Total				150

CMHC REQUIRED	13	14.8	2.4	30.2	20%
CMHC PROVIDED	15	15	3	33	20.2%

APPENDIX B

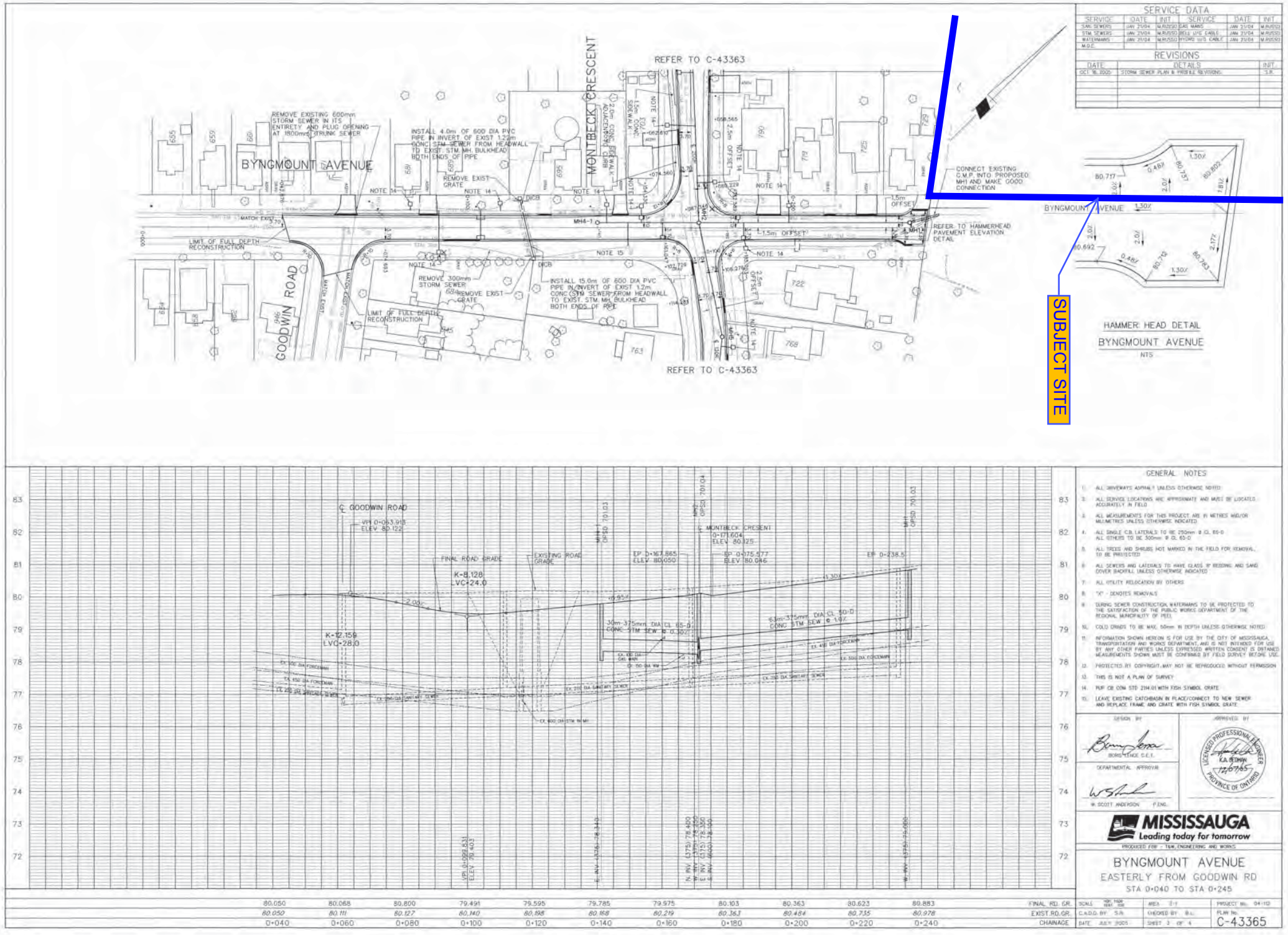

SERVICE DATA

SERVICE	DATE	INIT	SERVICE	DATE	INIT
SAN. SEWERS	JAN 21/04	M.RUSSO	GAS MAINS	JAN 21/04	M.RUSSO
STM. SEWERS	JAN 21/04	M.RUSSO	BELL U/G CABLE	JAN 21/04	M.RUSSO
WATERMAINS	JAN 21/04	M.RUSSO	HYDRO U/G CABLE	JAN 21/04	M.RUSSO
M.O.E.					

REVISIONS

DATE	DETAILS	INIT
OCT. 16, 2005	STORM SEWER PLAN & PROFILE REVISIONS.	S.R.

GENERAL NOTES

1. ALL DRIVEWAYS ASPHALT UNLESS OTHERWISE NOTED
2. ALL SERVICE LOCATIONS ARE APPROXIMATE AND MUST BE LOCATED ACCURATELY IN FIELD
3. ALL MEASUREMENTS FOR THIS PROJECT ARE IN METRES AND/OR MILLIMETRES UNLESS OTHERWISE INDICATED
4. ALL SINGLE C.B. LATERALS TO BE 250mm Ø CL 65-D ALL OTHERS TO BE 300mm Ø CL 65-D
5. ALL TREES AND SHRUBS NOT MARKED IN THE FIELD FOR REMOVAL, TO BE PROTECTED
6. ALL SEWERS AND LATERALS TO HAVE CLASS 'B' BEDDING AND SAND COVER BACKFILL UNLESS OTHERWISE INDICATED
7. ALL UTILITY RELOCATION BY OTHERS
8. "X" - DENOTES REMOVALS
9. DURING SEWER CONSTRUCTION, WATERMAINS TO BE PROTECTED TO THE SATISFACTION OF THE PUBLIC WORKS DEPARTMENT OF THE REGIONAL MUNICIPALITY OF PEEL
10. COLD JOINTS TO BE MAX. 50mm IN DEPTH UNLESS OTHERWISE NOTED
11. INFORMATION SHOWN HEREON IS FOR USE BY THE CITY OF MISSISSAUGA, TRANSPORTATION AND WORKS DEPARTMENT, AND IS NOT INTENDED FOR USE BY ANY OTHER PARTIES UNLESS EXPRESSED WRITTEN CONSENT IS OBTAINED. MEASUREMENTS SHOWN MUST BE CONFIRMED BY FIELD SURVEY BEFORE USE.
12. PROTECTED BY COPYRIGHT. MAY NOT BE REPRODUCED WITHOUT PERMISSION
13. THIS IS NOT A PLAN OF SURVEY
14. PUF CB CON STD 2214.01 WITH FISH SYMBOL GRATE
15. LEAVE EXISTING CATCHBASIN IN PLACE/CONNECT TO NEW SEWER AND REPLACE FRAME AND GRATE WITH FISH SYMBOL GRATE

DESIGN BY: BORIS LENGE C.E.T.

APPROVED BY: LICENSED PROFESSIONAL ENGINEER K.A. BOWN 12/07/05 PROVINCE OF ONTARIO

DEPARTMENTAL APPROVAL: W. SCOTT ANDERSON P.ENG.

MISSISSAUGA Leading today for tomorrow

PRODUCED FOR: T&W, ENGINEERING AND WORKS

BYNGMOUNT AVENUE
EASTERLY FROM GOODWIN RD
STA 0+040 TO STA 0+245

FINAL RD. GR.	80.050	80.068	80.800	79.491	79.595	79.785	79.975	80.103	80.363	80.623	80.883	
EXIST.RD.GR.	80.050	80.111	80.127	80.140	80.198	80.168	80.219	80.363	80.484	80.735	80.978	
CHAINAGE	0+040	0+060	0+080	0+100	0+120	0+140	0+160	0+180	0+200	0+220	0+240	

SCALE: HOR. 1:500 VERT. 1:50	AREA: 0-1	PROJECT No.: 04-112
C.A.D.D. BY: S.R.	CHECKED BY: B.L.	PLAN No.: C-43365
DATE: JULY 2005	SHEET 3 OF 4	

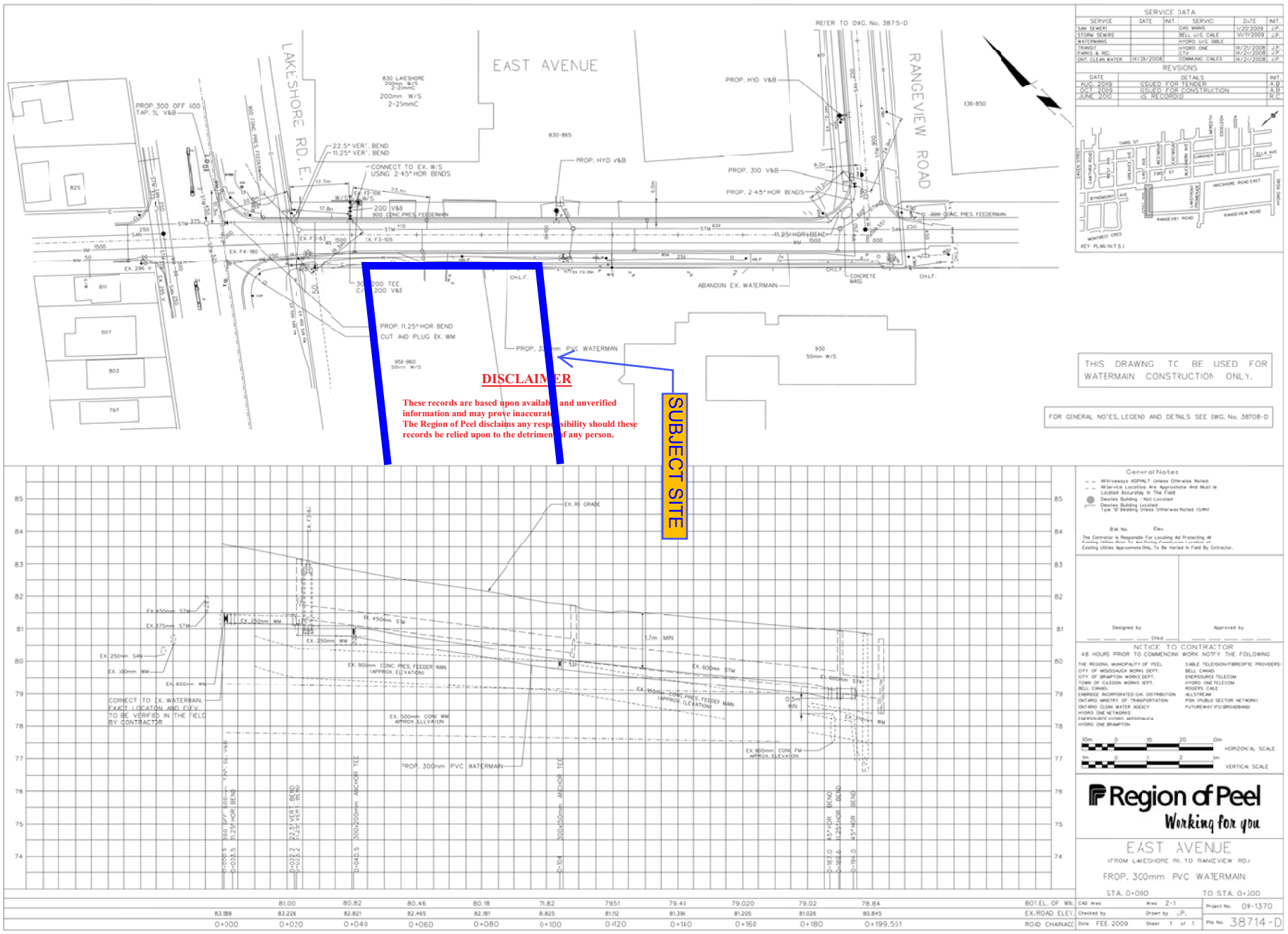
LAKESHORE RD. E.
EAST AVENUE
RANGEVIEW ROAD
REFER TO DWG. No. 3875-D
PROP. 300 OFF 600 TAP, SL V&B
CONNECT TO EX. W/S USING 2-45° HOR BENDS
22.5° VERT. BEND
11.25° VERT. BEND
PROP. HYD V&B
PROP. 300 V&B
PROP. 2-45° HOR BENDS
PROP. 11.25° HOR BEND
CUT AND PLUG EX. WM
ABANDON EX. WATERMAIN
CONCRETE MASS
PROP. 300mm PVC WATERMAIN
SUBJECT SITE
DISCLAIMER
These records are based upon available and unverified information and may prove inaccurate.
The Region of Peel disclaims any responsibility should these records be relied upon to the detriment of any person.
THIS DRAWING TO BE USED FOR WATERMAIN CONSTRUCTION ONLY.
FOR GENERAL NOTES, LEGEND AND DETAILS SEE DWG. No. 38708-D
EX. RD GRADE
EX. 450mm STM
EX. 375mm STM
EX. 250mm SAN
EX. 200mm WM
EX. 600mm WM
EX. 250mm WM
EX. 900mm CONC. PRES. FEEDER MAIN (APPROX. ELEVATION)
EX. 600mm STM
EX. 900mm CONC. PRES. FEEDER MAIN (APPROX. ELEVATION)
EX. 500mm CONC WM APPROX. ELLVATION
EX. 900mm CONC FM APPROX. ELEVATION
1.7m MIN
0.3m MIN
CONNECT TO EX. WATERMAIN. EXACT LOCATION AND EXTV. TO BE VERIFIED IN THE FIELD BY CONTRACTOR
PROP. 300mm PVC WATERMAIN
300 OFF 600mm TAP, SL V&B
11.25° HOR BEND
22.5° VER'T BEND
11.25° VER'T BEND
300x200mm ANCHOR TEE
300x150mm ANCHOR TEE
45° HOR BEND
11.25° HOR BEND
45° HOR BEND
SERVICE DATA
SERVICE | DATE | INIT. | SERVICE | DATE | INIT.
SAN. SEWER | | | GAS MAINS | IV/20/2009 | J.P.
STORM SEWERS | | | BELL U/G CABLE | V/07/2009 | J.P.
WATERMAINS | | | HYDRO U/G CABLE | | |
TRANSIT | | | HYDRO ONE | IX/21/2008 | J.P.
PARKS & REC. | | | CTV | IX/21/2008 | J.P.
ONT. CLEAN WATER | IX/29/2008 | | COMMUNIC. CABLES | IX/21/2008 | J.P.
REVISIONS
DATE | DETAILS | INIT.
AUG. 2009 | ISSUED FOR TENDER | A.B.
OCT. 2009 | ISSUED FOR CONSTRUCTION | A.B.
JUNE 2010 | AS RECORDED | R.C.
KEY PLAN (N.T.S.)
General Notes
All Driveways ASPHALT Unless Otherwise Noted.
All Service Locations Are Approximate And Must Be Located Accurately In The Field
Denotes Building - Not Located
Denotes Building Located Type 'B' Bedding Unless Otherwise Noted (SAN)
B.M. No. Elev.
The Contractor Is Responsible For Locating Ad Protecting All Existing Utilities Approximate Only, To Be Verified In Field By Contractor.
Designed by
Approved by
NOTICE TO CONTRACTOR
48 HOURS PRIOR TO COMMENCING WORK NOTIFY THE FOLLOWING
THE REGIONAL MUNICIPALITY OF PEEL
CITY OF MISSISSAUGA WORKS DEPT.
CITY OF BRAMPTON WORKS DEPT.
TOWN OF CALEDON WORKS DEPT.
BELL CANADA
ENBRIDGE INCORPORATED-GAS DISTRIBUTION
ONTARIO MINISTRY OF TRANSPORTATION
ONTARIO CLEAN WATER AGENCY
HYDRO ONE NETWORKS
ENERSOURCE HYDRO MISSISSAUGA
HYDRO ONE BRAMPTON
CABLE TELEVISION/FIBREOPTIC PROVIDERS:
BELL CANADA
ENERSOURCE TELECOM
HYDRO ONE TELECOM
ROGERS CABLE
ALLSTREAM
PSN (PUBLIC SECTOR NETWORK)
FUTUREWAY IFO/BROADBAND
HORIZONTAL SCALE
VERTICAL SCALE
Region of Peel
Working for you
EAST AVENUE
(FROM LAKESHORE RD. TO RANGEVIEW RD.)
FROP. 300mm PVC WATERMAIN
STA. 0+000 TO STA. 0+100
BOT.EL. OF WM.
EX.ROAD ELEV.
ROAD CHAINAGE
CAD Area Area Z-1
Checked by Drawn by J.P.
Date FEB. 2009 Sheet 1 of 1
Project No. 09-1370
Plo No. 38714-D

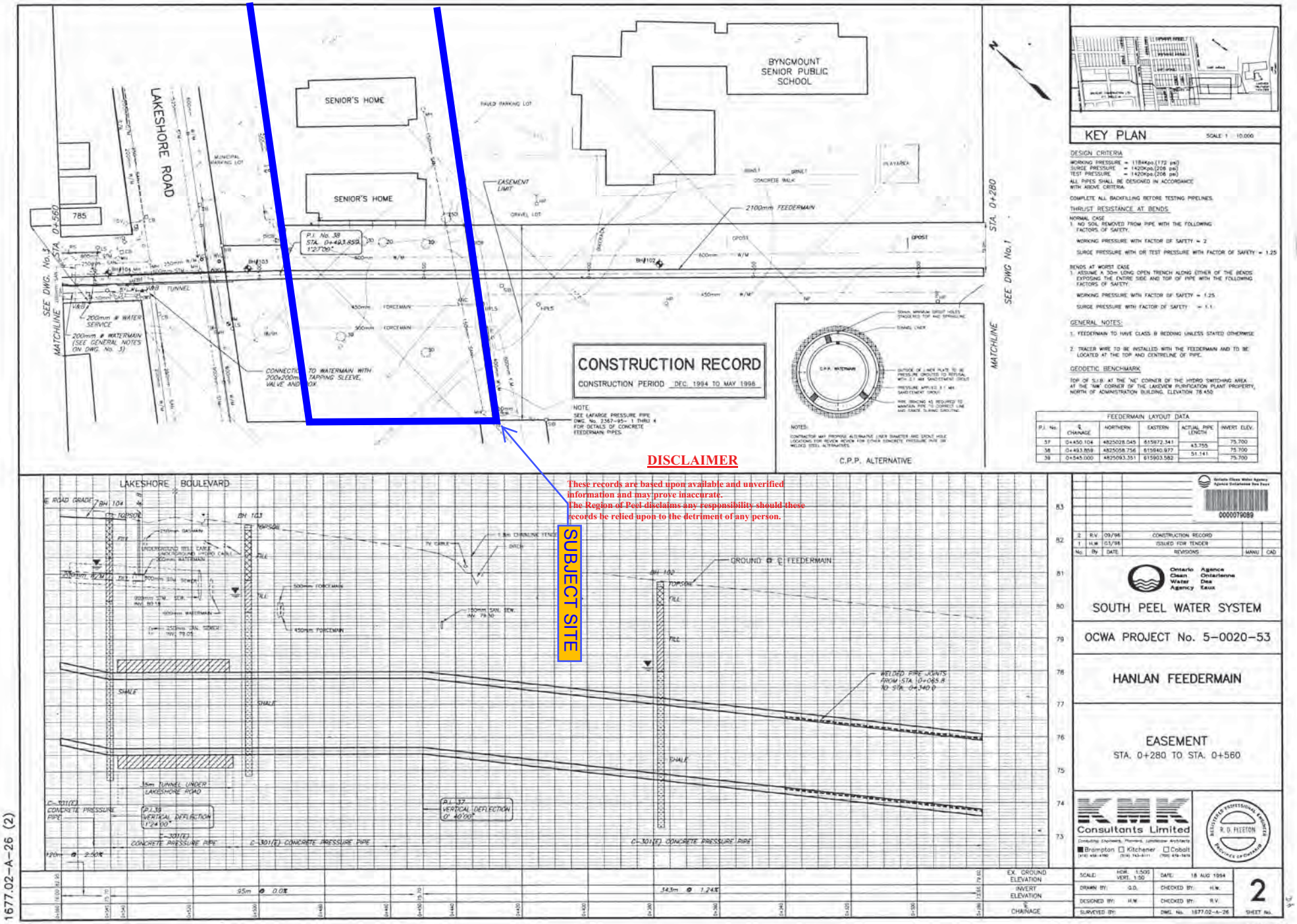

1677.02-A-26 (2)

38277-D

Region of Peel
working with you

Public Works

Water and Wastewater Servicing Analysis - Redevelopment of Peel Housing

958 & 960 East Avenue - City of Mississauga

GROWTH AND WATER RESOURCES

958 & 960 East Avenue -Existing Conditions

The subject property located at 959 & 960 East Avenue in the city of Mississauga and it is bounded by:

- **North:** Lakeshore Road East, fronted by small commercial uses and a five-storey independent living apartment building (Lakeside Court). Beyond, there are low-rise residential and the Gospel Assembly Church.

- **West**: Stable low-rise residential along Byngmount Avenue and Montbeck Crescent, known as the Lakeside Residential Neighbourhood.

- **East:** The site of the previous Byngmount Beach Public School and Light industrial uses fronting Lakeshore Road East and Rangeview Road

- **South:** The former Bygnmont Beach Site and Future EMS Satelite Station, Waterworks Park, Lakeview Water Treatment Plant and A.E. Crookes Park, which forms part of Mississauga's Waterfront Trail. Further south is the public marina.

Figure 1- Site Location

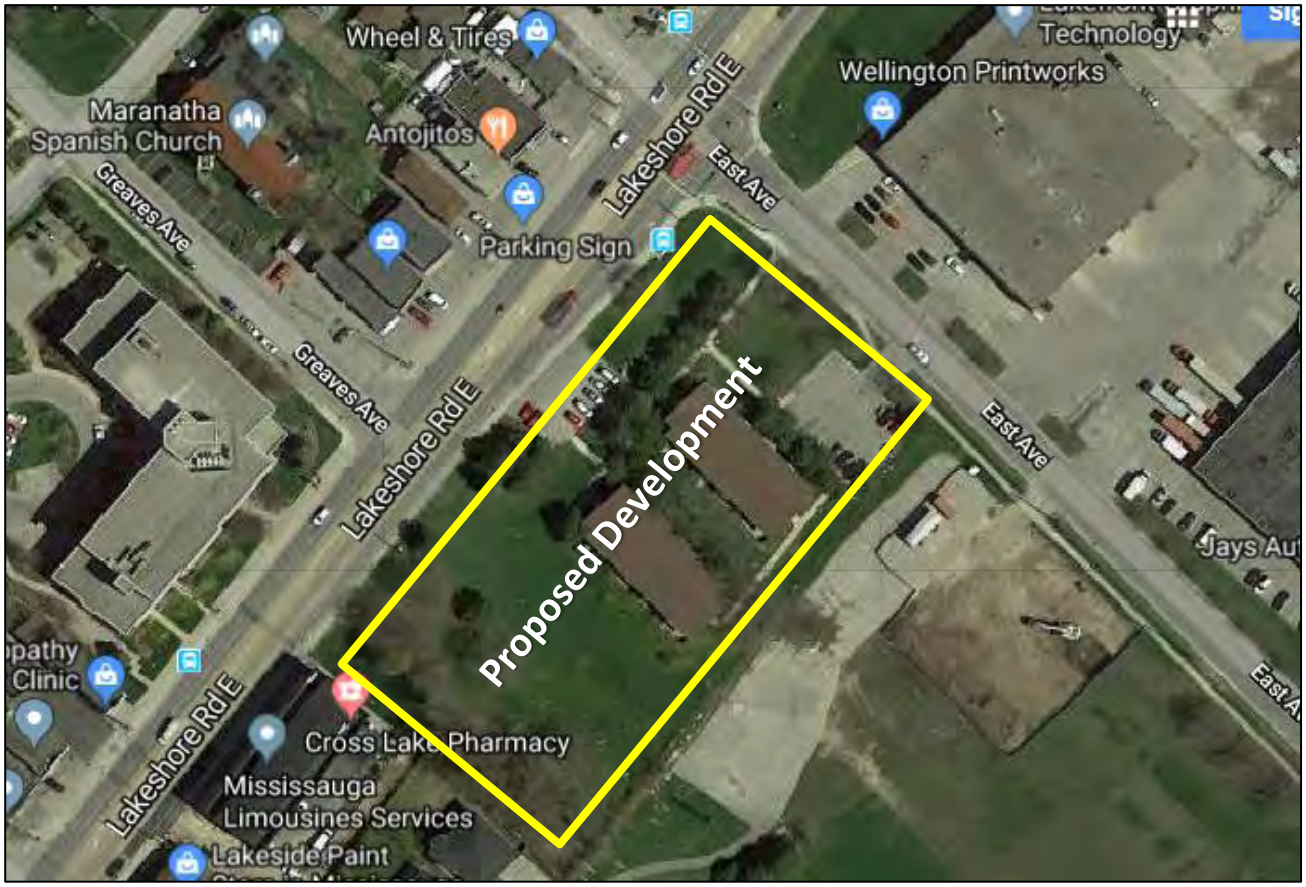

Figure 2- Site Location

The site currently consists of 30 units townhouses. The proposal is to demolish the existing units and redevelop by a new 7-storey building with a maximum of 180 units. The unit mix is expected to be 81 units at under 700 sq. feet and 99 units at over 700 square feet.

Based on the 2.7 people per unit the total growth forecast for this development is 405 people.

The Region of Peel provided the 2041 population and employment projections by small geographic unit (SGU) across the Region, referred to as SGU Scenario 16. The subject site is located within the SGU number M0169 as shown in Figure 3.
The total growth forecast for SGU M0169 is 300, and calculated growth forecast for this property is very lower than the proposed growth, as shown in Figure 3 & Table 1.

Table 1

Scenario / Year	Total
Growth to 2041 based on Weighted SGUs [1]	3
Proposed Development Growth	405

[1] *Weighted growth takes a proportion of SGUs based on area, 2041 growth numbers reference SGU Scenario 16.*

Table 2

Building Name	Address Existing Units	Existing Units	Proposed Growth Units	Proposed Growth Population	Growth Peak Wet Weather Flow (L/s)	Growth Water Demands (L/s)		
						Avg. Day	Max. Day	Peak Hour
East Ave.	958 & 960 East Ave.	130	150	405	5.0	1.3	2.6	3.9

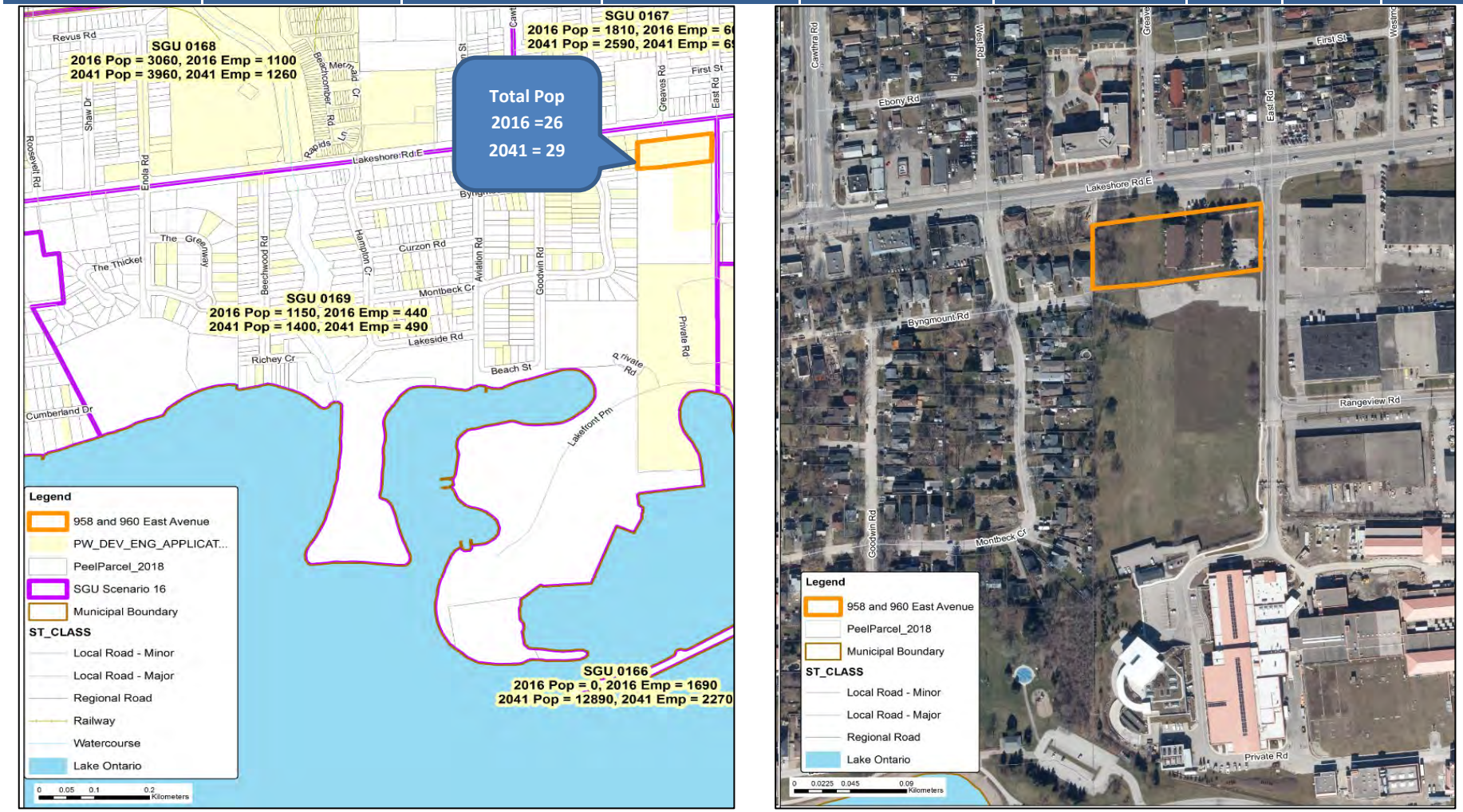

Figure 3 – Existing Condition

Water Servicing

This development located in Pressure Zone 1, close to the Lakeview Water Treatment Plant (WTP). Existing population in these parcels are serviced by the existing 300mm local watermain on East Avenue. The infrastructure in the vicinity of this development are as follows:

- A 300mm local distribution watermain on East Avenue (Zone 1)
- A 1500mm transmission main on East Road (Zone 1)
- A 900m transmission main on East Road (Zone 1)
- A 600mm major distribution feedermain on Lakeshore Road East (Zone 1)
- A 300mm local watermain on Lakeshore Road East (Zone 1)
- A 2100mm transmission main crossing the parcel (Zone 2)
- A 600mm major distribution feedermain crossing the parcel (Zone 1)

Proposed Water Servicing:

A 400 mm watermain is currently planned in the vicinity of the development, with expected installation year of 2026.

Based on the hydraulic modeling analysis, the existing 300mm local watermain on East Avenue has sufficient capacity in servicing the extra 150 units (equivalent population of 405) using the same service connection. The design criteria used in calculating the demand is:

- Unit Consumption Rate (Mix-used) = 280 L/cap/day
- MDD peak factor (Res)=2
- MDD peak factor (Emp)=1.4
- PHD peak factor (Res and Non-Res) =3

This servicing strategy demonstrates there is sufficient capacity under emergency conditions (i.e. fire) to service the additional proposed population for this development.

Wastewater Servicing

Sanitary flow from the existing units is currently being discharged to an existing 250 mm gravity sewer on Byngmount Avenue, west of the subject site, which conveys flow west via a network of sewers to the Beach Street Wastewater Pumping Station (WWPS). Flows from the Beach Street WWPS are then pumped to the 1650 mm Lakeshore Road East trunk sewer via two forcemains, 450 mm and 500 mm in diameter (Figure 5).

Proposed Wastewater Servicing

The existing 250 mm sewer on Byngmount Avenue is the only sanitary sewer can service the proposed development by gravity right now, however, the existing 300 mm & 375 mm downstream sewers already show some capacity issues.

The sanitary modeling analysis also revealed that the additional flow from this development will trigger downstream constraints and a potential surcharge along Montbeck Cr., Goodwin Road & Beach Street. Therfore the actual flow is being dischared from Lakeview Plant Backwash to the Montbeck Creek sewer was compared with the design flow, applied in sanitary model. The actual flows discharging from lakeview Backwash are little lower than the design flow right now.

Wastewater servicing option 1

As part of Inspiration Lakeview Development Servicing Study, a potential servicing option for Rangeview Road drainage area is to convey flow west by gravity to Beechwood SPS via a new proposed sewer along East Ave. and Lakeshore Road (Figure 4).

There is a possibility to service the proposed development area through the future proposed sanitary sewer along East Avenue and Lakeshore Road which it is proposed as part of Inspiration Lakeview Development Servicing Study, as shown in Figure 6. This will be a development driven project(Figure 6).

Figure 4 – Inspiration Lakeview Development Wastewater Servicing Strategy

Wastewater servicing option 2

Region of Peel has a plan to divert sanitary flow from Beach Street Sewage Pumping Station via a new gravity sewer along Aviation and Lakeshore Road East to Beechwood Sewage Pumping station. This trunk sewer will provide an opportunity to divert flow from Montbeck Cr. Sewer drainage area, north of Lakeshore Road to the new planned trunk sewer. Diverting flow from Montbeck Cr. Sewer drainage area, will provide extra capacity downstream of Montbeck Cr. Sewer to accommodate sanitary flow from Peel housing development (Figure 7).

The sanitary modeling analysis revealed capacity constraint in Montbeck Creek sewer, downstream of the development buildings. Therfore the actual flow is being dischared from Lakeview Plant Backwash to the Montbeck Creek sewer was compared with the design flow, applied in sanitary model. The actual flows, discharging from lakeview Backwash right now are little lower than the design flow. Therefore there is a opportunity to service this development buildings priror the completion of the Avition Road trunk sewer without sewer capacity restrictions.

Conclusions

Growth expected for this SGU based on the Growth Plan is lower than the development proposal. There is sufficient planned and future water infrastructure in the area to support the proposal. On the other hand, the sanitary flow from the development buildings can be dischared to the existing 250 mm sewer on Byngmount Avenue.

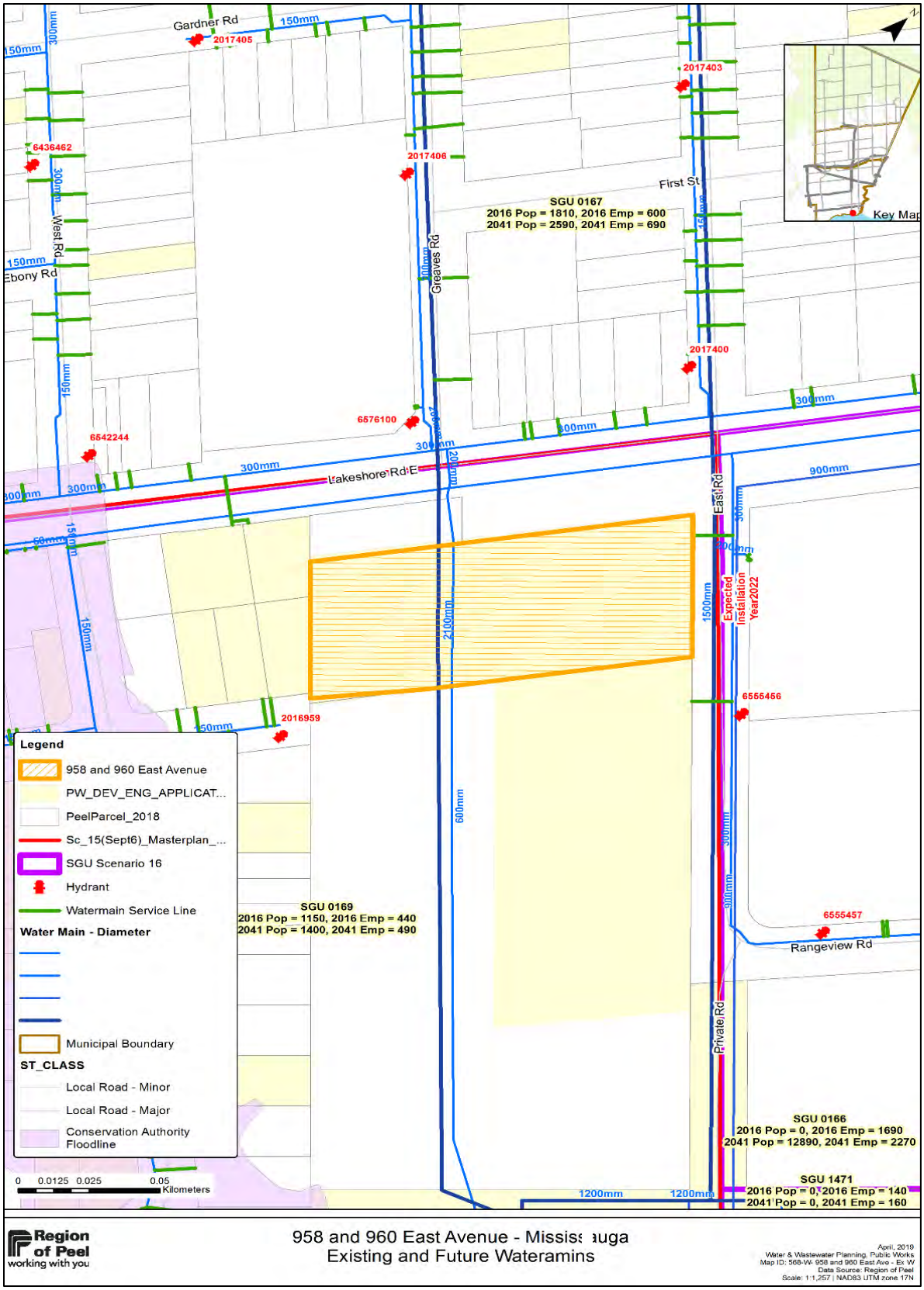

Figure 5– Water Servicing Strategy

Figure 6 – Wastewater Servicing Strategy- Option 1

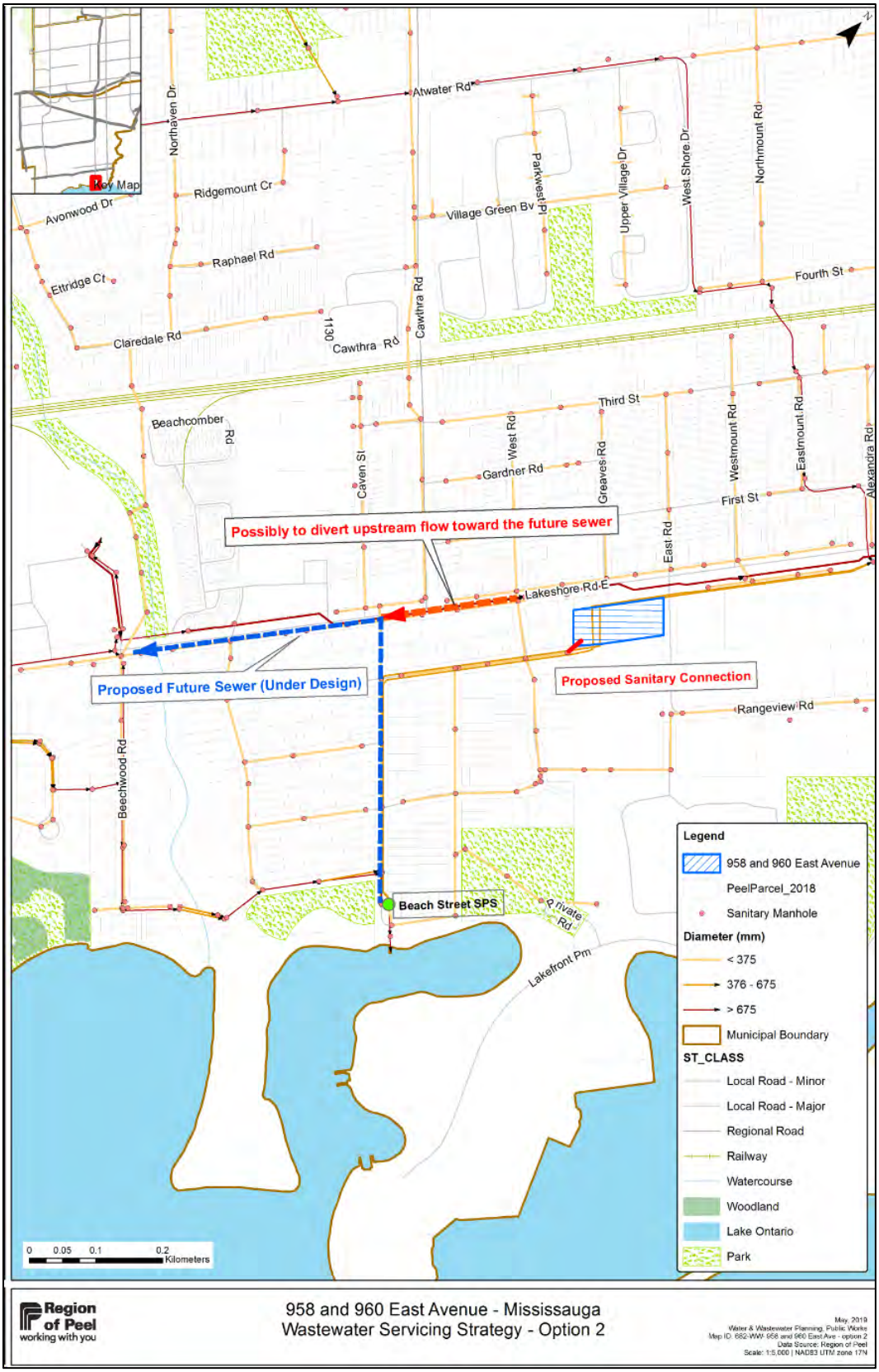

Figure 7– Wastewater Servicing Strategy- Option 2

APPENDIX C

958-960 East Avenue - Mixed Use Development
Water Demand Calculations

Designed By: **Robert Filipuzzi, P.Eng.**
Checked By: **Robert Filipuzzi, P.Eng.**
File No. 19002
Date: 19 April 2021

Domestic Water Supply Demands:

Per Region of Peel Watermain Design Criteria for Water Distribution Systems
- assume Average Day demand is 280 L/capita/day for residential uses
- assume Average Day demand is 300 L/capita/day for ICI uses
- assume Population Density (see chart)

Unit Type	Population Density
1 Bedroom Unit	1.68 Persons / Unit
2 Bedroom Unit	2.54 Persons / Unit
3 Bedroom Unit	3.1 Persons / Unit
Townhouse Unit	2.7 Persons / Unit
Retail Space	50 Persons / ha floor area
Office Space	3.3 Persons / 100 sq.m

Building	Building Data		Population	ADD	PHD = ADD x PF_{PHD}[1]	MDD = ADD x PF_{MDD}[2]
	Units	(sq.m)	pers	(L/s)	(L/s)	(L/s)
1 Bd Unit	65	--	109	0.35	1.06	0.71
2 Bd Unit	74	--	188	0.61	1.83	1.22
3 Bd Unit	12	--	37	0.12	0.36	0.24
Total	151	--	334	1.1	3.3	2.2

[1] Peak Hour Demand, PHD, is 3.0 for residential and 3.0 for ICI
[2] Max Day Demand, MDD, is 2.0 for residential and 1.4 for ICI

Fire Protection Supply Demands:
Per Water Supply for Public Fire Protection Manual, 1999, by the Fire Underwriters Survey

STEP 1: Calculate Fire Flow

$$F = 220 \cdot C \cdot \sqrt{A} \cdot (\text{various adjustments}) \text{ L/min}$$

C = Coefficient related to type of construction:
= 1.5 for wood frame construction (Structure essentially all combustable)
= 1.0 for ordinary construction (brick or other masonry walls, combustable floor and interior)
= 0.8 for non combustable construction (unprotected metal structure components, masonry or metal walls)
= 0.6 for fire resistive construction (fully protected frame, floors, roof)

C =	0.6		
Largest Floor Area =	2,156	m2	
Floor Area Above =	2,137	m2	
Floor Area Below =	2,136	m2	Largest Floor + 25% x (Floor Above + Floor Below)
A =	3,224	m2	
F =	7,495	L/min	Round to the nearest 1000
F =	7,000	L/min	

STEP 2: Adjust for building occupancy (Note: Number shall not be less then 2000 L/min)
= -25% (Non-Combustible)
= -15% (Limited Combustible)
= 0 (Combustible)
= +15% (Free Burning)
= +25% (Rapid Burning)

Factor =	-15%	
F1 = F x Factor =	5,950	L/min

958-960 East Avenue - Mixed Use Development

Water Demand Calculations

STEP 3: Decrease F1 if building contains fire supression system

= -50% (Automatic Sprinklers)
= -30% (Adequately Designed System)
= Additional -10% if the water supply is standard for the system and the fire department hose lines required
= Additional -10% if the system is fully supervised

Factor =	-30%	
F2 = F1 x Factor =	-1,785	L/min

STEP 4: Increase F1 due to exposure / close proximity to other buildings (Note: Total shall not exceed 75%)

= 25% (0m to 3m)
= 20% (3.1m to 10m)
= 15% (10.1m to 20m)
= 10% (20.1m to 30.1m)
= 5% (30.1m to 45m)
= 0% (Greater then 45m)

Distances =	>45m / 35.7m / 35.1m / >45m	
Factors =	0% + 5% + 5% + 0%	
Factor =	10%	(max 75%)
F3 = F1 x Factor =	595	L/min

STEP 5: Calculate Fire Flow (Note: Fireflow shall not be less then 2000 L/min or greater then 45,000 L/min)

Fire Flow =	F1-F2+F3		
F1 =	5,950	L/min	
+ F2 =	-1,785	L/min	
+ F3 =	595	L/min	
Fire Flow =	4,760	L/min	Round to the nearest 1000
Fire Flow =	5,000	L/min	
Fire Flow =	83.3	L/s	

STEP 6: Calculate Total Water Demand (Max Day Demand + Fire Flow)

Recall Max Day Demand (from chart above) =	2.17	L/s
TOTAL Fire Demand =	85.5	L/s

fabian papa partners
A Division of FP&P HydraTek Inc.
216 Chrislea Road Suite 204 | Vaughan ON | L4L 8S5 Canada | t: 905-264-2420 | www.fabianpapa.com

958-960 East Avenue - Mixed Use Development

Water Demand Calculations

Designed By: **Robert Filipuzzi, P.Eng.**
Checked By: **Robert Filipuzzi, P.Eng.**

File No. 19002
Date: 19 April 2021

Recall Total Fire Demand = 85.5 L/s (Taken From Fire Flow Spreadsheet)

Hydrant Flow Test Results

Flow (gpm)	Flow (L/s)	Pressure (psi)	Pressure (kPa)	
0	0.0	86	593	- Assumed
314	19.8	85.5	590	
738	46.6	84	579	
1297	81.8	80	552	
1,355	85.5	79.49	548	- Interpolated using:
5,039	317.9	17.13	118	- Projected using:

$$Q_R = Q_F \times \frac{h_r^{0.54}}{h_f^{0.54}}$$

Hazen-Williams formula for watermain head loss:

$h_L = (10.675 * L * Q^{1.85}) / (C^{1.85} * D^{4.8655})$

where

h_L = *pressure drop (m)*
L = length of pipe (m)
Q = flow rate (m^3/s)
C = roughness coefficient
D = inside hydraulic diameter (m)

New 100 mm domestic watermain

L= 2.5 m
D= 100 mm
C= 100

L= 13.0 m
D= 150 mm
C= 100

Peak Hour Flow		Head Loss, h_L				Residual Pressure [1]		Residual Pressure	
Q (L/s)	Q (m3/s)	(m)	(in)	(psi)	(kPa)	(psi)	(kPa)	(psi)	(kPa)
3.3	0.00	0.02	0.7	0.02	0.16	86.0	593	**86.0**	**593**

[1] Residual pressure taken from above

New 150 mm fire service

L= 14.9 m
D= 150 mm
C= 100

Total Fire Flow (Max Day + Fire Flow)		Head Loss, h_L				Residual Pressure [1]		Residual Pressure	
Q (L/s)	Q (m3/s)	(m)	(in)	(psi)	(kPa)	(psi)	(kPa)	(psi)	(kPa)
85.5	0.09	3.43	134.9	4.87	33.61	79.5	548	**74.6**	**514**

[1] Residual pressure taken from above

APPENDIX D

958-960 East Avenue - Mixed Use Development

Region of Peel - Public Works Department

SANITARY SEWER DESIGN SHEET

Relevant Region of Peel Design Criteria:

Domestic sewage flow based upon a unit flow of **302.8 Lpcd**
Infiltration flow based upon a unit flow of **0.20 L/s/ha**
Residential density per Table 3-3 from Region DC Update dated May 2015
Commercial Population based on 50 people/ha floor area

Minimum flow velocity for partial flow = **0.75 m/s.**
Maximum flow velocity for pipe full flow = **3.5 m/s**
Peaking Factor per Harmon Equation
Mannings = 0.013

Designed By: **Robert Filipuzzi, P.Eng.**
Checked By: **Robert Filipuzzi, P.Eng.**
File No. 19002
Date: 19 April 2021

Location	from M.H.	to M.H.	DESIGN FLOW CALCULATIONS # of Units	Cumulative Area (ha)	Density (p/unit) or (p/ha)	Cumulative Population (p)	Peaking Factor M	Sewage Flow (1) (L/s)	Infiltration Flow (2) (L/s)	Foundation Drain (3) (L/s)	Total Flow, Qd (1)+(2)+(3) (L/s)	SEWER DESIGN & ANALYSIS Nominal Diameter (mm)	Pipe Slope (%)	Pipe Length (m)	Nominal Full Flow Capacity, Qf (L/s)	Nominal Full Flow Velocity (m/s)	Percent of Full Flow (Qd/Qf)	Actual Flow Velocity V (m/s)	Remarks
									0.20 L/s/ha										
PRE-DEVELOPMENT																			
958-960 East Ave	Subject Site	Byngmount Ave	30	0.7482	175	131	4.21	1.93	0.15		2.1								
REGION OF PEEL SERVICING ASSESSMENT																			
958-960 East Ave	Subject Site	Byngmount Ave	180	0.7482	2.7	486	3.98	6.78	0.15		6.9								
											4.8	←	Increase in Sanitary Flow (Pre to Post) Analysized by Region						
POST-DEVELOPMENT																			
958-960 East Ave	CNTL.MH.3A	MH.2A	151	0.7482		334	4.06	4.76	0.15	1.6	6.5	200	1.0%	9.6	34.2	1.06	19.0%	0.81	
	MH.2A	MH.1A									6.5	250	1.1%	18.5	65.1	1.28	10.0%	0.82	
	MH.1A	EX.MH									6.5	250	3.6%	48.9	117.7	2.32	5.5%	1.24	
											4.4	←	Increase in Sanitary Flow (Pre to Post)						

Per the Hydrogeological report, long-term foundation subdrainage is expected to be 0.27 L/s. It is assummed that the sump pump will operate for 4 hours per day, with a corresponding maximum pumping rate of 1.6 L/s.

PRE-DEVELOPMENT	Units	Density	Population
Townhouses	40	2.7 / unit	108

POST-DEVELOPMENT	Units / GFA	Density	Population
1 Bd Unit	65	1.7 / unit	109
2 Bd Unit	74	2.5 / unit	188
3 Bd Unit	12	3.1 / unit	37
	151		334

226 Increase in Population

Unit Type	Population Density
1 Bedroom Unit	1.68 Persons / Unit
2 Bedroom Unit	2.54 Persons / Unit
3 Bedroom Unit	3.1 Persons / Unit
Townhouse Unit	2.7 Persons / Unit
Retail Space	50 Persons / ha floor area
Office Space	3.3 Persons / 100 sq.m

fabian papa partners
A Division of FP&P HydraTek Inc.
216 Chrislea Road, Suite 204 | Vaughan ON | L4L 8S5 Canada | t: 905-264-2420 | www.fabianpapa.com

HYDROGEOLOGICAL INVESTIGATION

958-960 EAST AVENUE, MISSISSAUGA, ON

REGION OF PEEL

PROJECT NO.: 181-11306
DATE: DECEMBER 2018

DRAFT REPORT

WSP
51 CONSTELLATION COURT
TORONTO, ON
CANADA M9W 1K4

T: +1 416 798-0065
F: +1 416 798-0518
WSP.COM

Table 4.5: Summary of Analytical Results

PARAMETER	*LIMITS FOR SANITARY AND COMBINED SEWER DISCHARGE (TABLE 1)*	*LIMITS FOR STORM SEWER DISCHARGE (TABLE 2)*	*CONCENTRATION FOR BH18-2D (21/NOV/2018)*	*CONCENTRATION FOR BH18-4 (21/NOV/2018)*
Total Suspended Solids (TSS, mg/L)	350	15	**3000**	**1000**
Total Manganese (Mn, mg/L)	5	0.05	**1.7**	**4.8**
Total Zinc (Zn, mg/L)	3	0.04	**0.15**	**0.081**
Total Kjeldahl Nitrogen (TKN, mg/L)	100	1	**7**	0.95

BOLD: Exceeds the Table 2 limit for discharge to the storm sewer
BOLD AND UNDERLINED: Exceeds both Table 1 and Table 2

4.6.1 BH18-2D WATER QUALITY (REGION OF PEEL STORM AND SANITARY DISCHARGE ASSESSMENT)

The BH18-2d sample had four (4) exceedances against the Table 2 – Limits for Storm Sewer Discharge: total suspended solids (TSS), Total Kjeldahl Nitrogen (TKN), total manganese (Mn), and total zinc (Zn). When compared to the less stringent Table 1 – Limits for Sanitary Sewer Discharge, the BH18-2d sample had one (1) exceedance: total suspended solids (TSS). If discharge to the storm sewer is considered, the groundwater will need pre-treatment for the exceedances listed above. If the option is to discharge to the sanitary sewer, the groundwater will need pre-treatment for TSS.

4.6.2 BH18-4 WATER QUALITY (REGION OF PEEL STORM AND SANITARY DISCHARGE ASSESSMENT)

The BH18-4 sample had three (3) exceedances against the Table 2 – Limits for Storm Sewer Discharge: total suspended solids (TSS), total manganese (Mn), and total zinc (Zn). When compared to the less stringent Table 1 – Limits for Sanitary Sewer Discharge, the BH18-4 sample had one (1) exceedance: total suspended solids (TSS). If discharge to the storm sewer is considered, the groundwater will need pre-treatment for the exceedances listed above. If the option is to discharge to the sanitary sewer, the groundwater will need pre-treatment for TSS.

CONSTRUCTION DEWATERING ASSUMPTIONS

Excavation, P2, No Caisson

PROJECT TITLE: 958-960 Lakeshore Road - Hydrogeological Investigation

Dewatering Calculation

Dupuit-Thiem Equation

FORMATION BEING DEWATERED (upper silty clay till/shale)

Table E-1: Construction Dewatering Flow Rate

Description	Symbol	Value	Unit	Explanation
Input Data				
Ground surface		82.12	m asl	approximate, based on BH Logs
Groundwater Elevation		80.20	m asl	BH18-4 Nov 2018 *High Water Level
Lowest excavation depth		72.12	m asl	Estimated
Base of Aquifer		70.00	m asl	Base of bedrock aquifer
Hydraulic Conductivity	K	6.74E-07	m/s	Geomean - SWRT
	K	5.82E-02	m/day	Converted to m/day
Dimensions of excavation	a	57.0	m	Plan of Survey (Young & Young Surveying Inc.)
	b	136.0	m	Plan of Survey (Young & Young Surveying Inc.)
Output				
Static Water Level		80.2	m asl	Shallow water level, maximum
Target Pumping Water Level		71.1	masl	1m below the underside of excavation
Water Level above aquifer bottom before dewatering	H	10.2	m	
Water level at excavation wall	h	1.1	m	
Effective Radius	r_e	49.7	m	Effective radius of rectangular excavation
Sichardt Estimate for Radius of Influence	R_{sich}	22.4	m	where c = 3000 for well approximation
Radius of Influence	R_0	72.0	m	Manipulated value, when $R_{sich} < r_{eff,}$ otherwise $R_0 = R_{sich}$
Construction Dewatering Flow Rate	Q	50.6	m^3/day	Construction flow rate - Dupuit Equation
Safety Factor	S.F.	200.00	%	Enter desired safety factor
Maximum Construction Flow Rate (with applied factor of safety)	Q_{max}	101.2	m^3/day	during the initial period
Estimated Construction Dewatering Flow Rate		**50,600**	L/day	
Estimated Maximum Construction Flow Rate with Safety Factor		**101,000**	L/day	

Location	Volume of Excavation (m^3)	Porosity	Total (m^3)
Excavation, initial storage	70388.16	0.3	21116

Short Term (no caisson) = 1.17 L/s

CONSTRUCTION DEWATERING ASSUMPTIONS

Excavation, P2, Interlocking caisson

PROJECT TITLE: 958-960 Lakeshore Road - Hydrogeological Investigation

Dewatering Calculation

Dupuit-Thiem Equation

FORMATION BEING DEWATERED (upper silty clay till/shale)

Table E-2: Construction Dewatering Flow Rate

Description	Symbol	Value	Unit	Explanation
Input Data				
Ground surface		82.12	m asl	approximate, based on BH Logs
Groundwater Elevation		80.20	m asl	BH18-4 Nov 2018 *High Water Level
Lowest excavation depth		72.12	m asl	Estimated
Base of Aquifer		70.00	m asl	Base of bedrock aquifer
Hydraulic Conductivity	K	5.00E-08	m/s	Concrete caisson, conservative, assumed leaky
	K	4.32E-03	m/day	Converted to m/day
Dimensions of excavation	a	57.0	m	Plan of Survey (Young & Young Surveying Inc.)
	b	136.0	m	Plan of Survey (Young & Young Surveying Inc.)
Output				
Static Water Level		80.2	m asl	Shallow water level, maximum
Target Pumping Water Level		71.1	masl	1m below the underside of excavation
Water Level above aquifer bottom before dewatering	H	10.2	m	
Water level at excavation wall	h	1.1	m	
Effective Radius	r_e	49.7	m	Effective radius of rectangular excavation
Sichardt Estimate for Radius of Influence	R_{sich}	6.1	m	where c = 3000 for well approximation
Radius of Influence	R_0	55.8	m	Manipulated value, when $R_{sich} < r_{eff,}$ otherwise $R_0 = R_{sich}$
Construction Dewatering Flow Rate	Q	12.1	m^3/day	Construction flow rate - Dupuit Equation
Safety Factor	S.F.	200.00	%	Enter desired safety factor
Maximum Construction Flow Rate (with applied factor of safety)	Q_{max}	24.1	m^3/day	during the initial period
Estimated Construction Dewatering Flow Rate		**12,100**	L/day	
Estimated Maximum Construction Flow Rate with Safety Factor		**24,000**	L/day	

Location	Volume of Excavation (m^3)	Porosity	Total (m^3)
Excavation, initial storage	70388.16	0.3	21116

Short Term (if caisson) = 0.27 L/s

Long Term Drainage Calculation

PROJECT TITLE: 958-960 Lakeshore Road - Hydrogeological Investigation

Foundation Drains, P2

Permanent drainage calculation

Dupuit-Thiem Equation

Table F-1: Permanent Drainage Flow Rate Estimate

Description	Symbol	Value	Unit	Explanation
Input Data				
Ground surface		82.12	m asl	approximate, based on BH Logs
Groundwater Elevation		80.20	m asl	BH18-4 Nov 2018 *High Water Level
Approximate P2 Slab		75.12	m asl	Estimated
Base of Aquifer		59.0	m asl	Base of bedrock aquifer
Hydraulic Conductivity	K	5.00E-09	m/s	Caisson effect
	K	4.32E-04	m/day	Converted to m/day
Dimensions of excavation	a	57.0	m	Plan of Survey (Young & Young Surveying Inc.)
	b	136.0	m	Plan of Survey (Young & Young Surveying Inc.)
Output				
Static Water Level		80.2	m asl	Shallow water level, maximum
Target Pumping Water Level		74.6	masl	0.5m below the P2 slab
Water Level above aquifer bottom before dewatering	H	21.2	m	
Water level at excavation wall	h	15.6	m	
Effective Radius	r_e	49.7	m	Effective radius of rectangular excavation
Sichardt Estimate for Radius of Influence	R_{sich}	1.2	m	where c = 3000 for well approximation
Radius of Influence	R_0	50.9	m	
Long Term Drainage Calculation	Q	11.8	m^3/day	Dupuit Thiem Steady State Flow to subdrain
Safety Factor	S.F.	200.00	%	Enter desired safety factor
Maximum Long-Term Flow Rate (with applied factor of safety)	Q_{max}	23.7	m^3/day	Seepage from infiltration, and through caisson
Estimated Long-Term Drainage Flow Rate		**11,800**	L/day	
Estimated Long-Term Drainage Flow Rate with Safety Factor		**23,700**	L/day	

Long Term = 0.27 L/s

APPENDIX E

WATERSHED BOUNDARY: CAWTHRA CREEK

A-1 - Watershed Boundaries

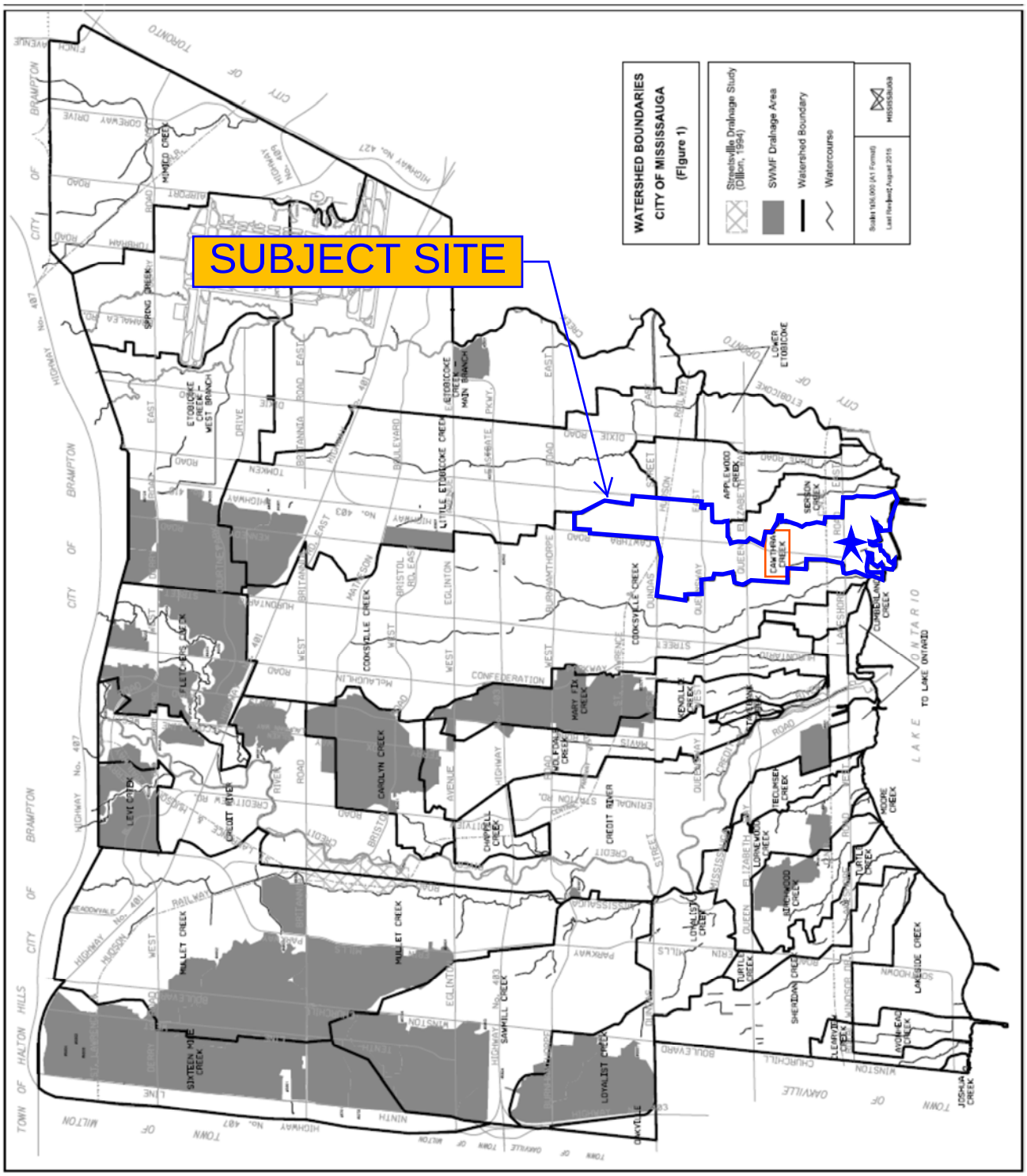

TABLE 2.01.03.03a: STORMWATER QUANTITY CONTROL REQUIREMENTS

Note 1: In all cases, storm sewer capacity constraints or downstream concerns may govern

Note 2: Where "pre-development" is listed as part of the requirement, it is implied as raw land for which the run-off co-efficient=0.25 but will not exceed 0.50 for a site that may already be developed

Note 3: CVC-Credit Valley Conservation, TRCA-Toronto Region Conservation Authority, CH-Conservation Halton

Subwatershed Name (Conservation Authority)	Quantity Control Criteria	References & Notes
Applewood Creek (CVC)	100 Year Post to 2 Year Pre-development Control	-
Avonhead Creek (CVC)	100 Year Post to 2 Year Pre-development Control	Southdown District Master Drainage Plan (Totten Sims Hubicki, 2000)
Birchwood Creek (CVC)	100 Year Post to 2 Year Pre-development Control	-
Carolyn Creek (CVC)	Provide post to pre control for all storms (i.e. 2,5,10,25,50 & 100 year)	Master Drainage Study (Winter Associates, 1987)
Cawthra Creek (CVC)	100 Year Post to 2 Year Pre-development Control	Drainage diversion to Cooksville Creek and a very small area draining to creek.
Chappell Creek (CVC)	10 Year Post to 2 Year Pre-development Control	-
Clearview Creek (CVC)	100 Year Post to 2 Year Pre-development Control	Southdown District Master Drainage Plan (Totten Sims Hubicki, 2000)
Cooksville Creek (CVC)	100 Year Post to 2 Year Pre-development Control	Revised development standards via Mississauga Staff report to City Council
Credit River - Norval to Port Credit (CVC)	No control required	Subwatershed Study in progress (partially complete)
Cumberland Creek (CVC)	No control required	-
Etobicoke Creek - Main Branch & Lower Etobicoke (TRCA)	No control required in the City of Mississauga	Hydrologic Model: VISUAL OTTHYMO-Return period peak flows based on the AES - 12 hour design storm Hydrology Study:Etobicoke Creek Hydrology Update (MMM Group, 2013)

Drainage Area Map (provided by the City)

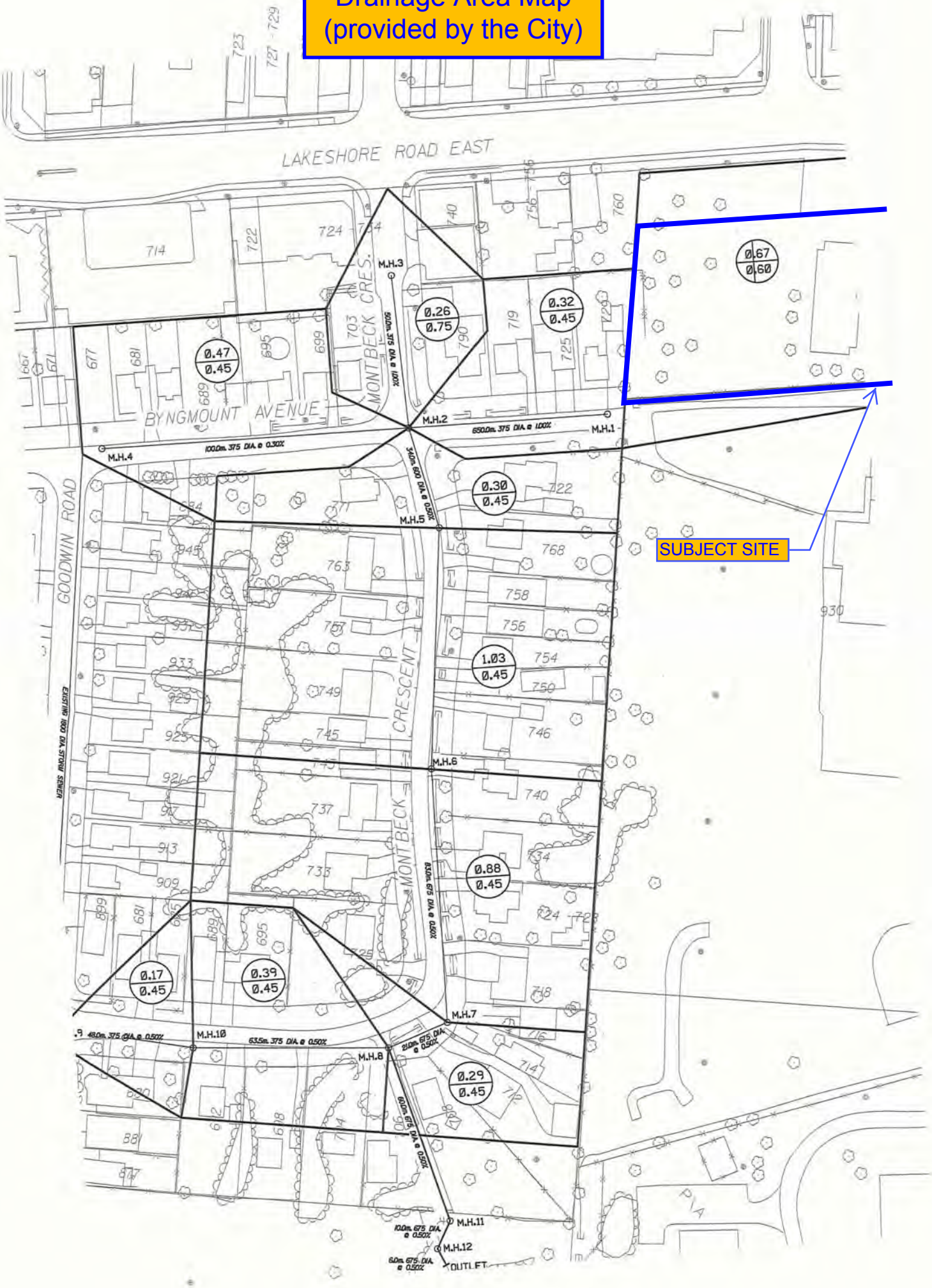

SUBDIVISION___MOUNTBECK CRESCENT / BYNGMOUNT ROAD

CONSULTANT_____

MAJOR DRAINAGE AREA_____Z-10_____

CITY OF MISSISSAUGA

STORM DRAINAGE DESIGN CHART

FOR CIRCULAR DRAINS FLOWING FULL

SHEET No.___1__OF___1_____ DATE___FEB 2004

PROJECT No.____17111 04112 / 04113_____

DESIGNED BY___BORIS LENCE C.E.T._____

LINE NO.	LOCATION	MH	MH	DRAINAGE AREA	RUN OFF COEFF	IMP AREA	ACCUMM DRAINAGE AREA	ACCUMM IMP AREA	TIME OF FLOW	TIME OF ENTRY	TIME OF CONC	R'FALL INTENS	EXP FLOW	TYPE OF PIPE	MANNING COEFF	SLOPE	DIA	LENGTH	VEL	CAP	UPSTREAM INVERT	DNSTREAM INVERT	TIME IN SECTION
				A (ha)	C	A*C	SUM(A) (ha)	SUM(A*C)	Tof (min)	Te (min)	To+Td+Tt (min)	I (mm/hr)	Q=AIC/360 (m3/sec)		n	S (%)	D (mm)	L (m)	V (m/sec)	Q (m3/sec)	(m)	(m)	(min)
1																							
2	EXTERNAL (School East Of Byngmount)	-	1	0.67	0.60	0.40	0.67	0.40															
3	Byngmount Rd.- East Of Montbeck Cres.	1	2	0.32	0.45	0.14	0.99	0.55	-	15.00	15.00	99	0.15	conc.	0.013	1.00	375	65.00	1.60	0.18	79.000	78.350	0.68
4																							
5																							
6	Montbeck Cres. - North Of Byngmount Rd.	3	2	0.26	0.75	0.20	0.26	0.20	-	15.00	15.00	99	0.05	conc.	0.013	1.00	375	50.00	1.60	0.18	78.900	78.400	0.52
7																							
8																							
9	Byngmount Rd.- West Of Montbeck Cres.	4	2	0.47	0.45	0.21	0.47	0.21	-	15.00	15.00	99	0.06	conc.	0.013	0.30	375	100.00	0.88	0.10	77.960	77.660	1.90
10																							
11																							
12	Montbeck Cres. - South Of Byngmount Rd.	2	5	0.30	0.45	0.14	2.02	1.09	1.90	15.00	16.90	92	0.28	conc	0.013	0.25	600	34.00	1.10	0.32	77.600	77.515	0.52
13	Montbeck Cres. - South Of Byngmount Rd.	5	6	1.03	0.45	0.46	3.05	1.55	0.52	16.90	17.41	91	0.39	conc.	0.013	0.50	600	79.00	1.55	0.45	77.490	77.095	0.85
14	Montbeck Cres. - South Of Byngmount Rd.	6	7	0.88	0.45	0.40	3.93	1.95	0.85	17.41	18.26	88	0.48	conc.	0.013	0.50	675	83.00	1.68	0.62	77.020	76.605	0.82
15	Montbeck Cres. - South Of Byngmount Rd.	7	8	0.29	0.45	0.13	4.22	2.08	0.82	18.26	19.09	86	0.49	conc.	0.013	0.50	675	21.00	1.68	0.62	76.605	76.500	0.21
16																							
17																							
18	Montbeck Cres. - East Of Goodwin Rd.	9	10	0.17	0.45	0.08	0.17	0.08	0.00	15.00	15.00	99	0.02	conc	0.013	1.00	375	24.00	1.60	0.18	77.670	77.430	0.25
19	Montbeck Cres. - East Of Goodwin Rd.	10	8	0.39	0.45	0.18	0.56	0.25	0.25	15.00	15.25	98	0.07	conc.	0.013	1.00	375	63.00	1.60	0.18	77.430	76.800	0.65
20																							
21	Montbeck Cres. Through Easement	8	11	0.00	0.45	0.00	4.78	2.33	0.21	19.09	19.29	85	0.55	conc.	0.013	0.50	675	60.00	1.68	0.62	76.200	75.900	0.60
22	Montbeck Cres. Through Park	11	12	0.00	0.45	0.00	4.78	2.33	0.60	19.29	19.89	83	0.54	conc.	0.013	0.50	675	10.00	1.68	0.62	75.900	75.850	0.10
23	Montbeck Cres. Through Park	12	Outlet	0.00	0.45	0.00	4.78	2.33	0.10	19.89	19.99	83	0.54	conc.	0.013	0.50	675	6.00	1.68	0.62	75.850	75.820	0.06
24																							
25																							
26																							
27																							
28																							
29																							
30																							
31																							
32																							
33																							
34																							
35																							

DWN. BY:	RDF
DESIGNED BY:	RDF
CHECKED BY:	RDF
SCALE:	1:250
DATE:	22 SEP 2020
SHEET NO:	1 OF 1

fabian papa & partners
A Division of FP&P HydraTek Inc.
216 Chrislea Road, Suite 204
Vaughan, Ontario, L4L 8S5
t: 905-264-2420
www.fabianpapa.com

PROJECT NO:	DWG NO:	REV NO:
19002	PRE-SWM	1

PROJECT NAME:

958-960 EAST AVE.
RESIDENTIAL DEVELOPMENT

DRAWING TITLE:

PRE-DEVELOPMENT STORM DRAINAGE PLAN

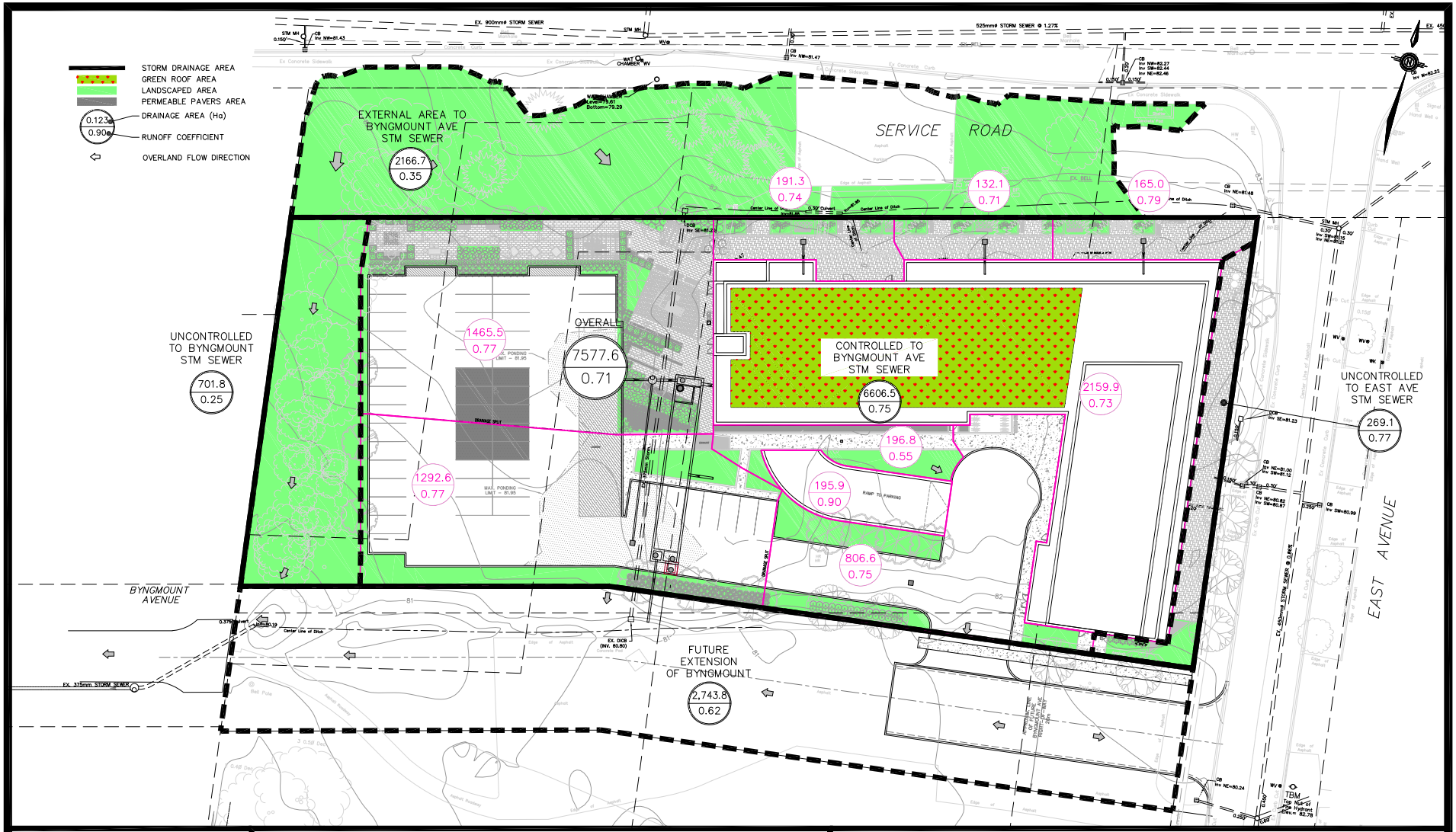

DWN. BY:	RDF
DESIGNED BY:	RDF
CHECKED BY:	RDF
SCALE:	NTS
DATE:	19 APR 2021
SHEET NO:	1 OF 1

fabian papa & partners
A Division of FP&P HydraTek Inc.
216 Chrislea Road, Suite 204
Vaughan, Ontario, L4L 8S5
t: 905-264-2420
www.fabianpapa.com

PROJECT NAME:

958–960 EAST AVE.
RESIDENTIAL DEVELOPMENT

DRAWING TITLE:

POST–DEVELOPMENT SWM PLAN

PROJECT NO:	DWG NO:	REV NO:
19002	POST–SWM	0

958-960 East Avenue
Run-Off Coefficients
City of Mississauga

Designed By: Robert Filipuzzi, P.Eng.
Checked By: Robert Filipuzzi, P.Eng.
File No. 19002
Date: 19 Apr 2021

Pre-Development Conditions

To Byngmount Avenue

Roof Bare	727.8	12.1%	0.90	0.11
Green Roof		0.0%	0.45	0.00
Landscape	5,064.1	83.9%	0.25	0.21
Permeable		0.0%	0.55	0.00
Hard Surface	243.7	4.0%	0.90	0.04
	6,035.6	100%		0.35

To East Avenue

Roof Bare	150.3	9.7%	0.90	0.09
Green Roof		0.0%	0.45	0.00
Landscape	807.2	52.3%	0.25	0.13
Permeable		0.0%	0.55	0.00
Hard Surface	584.5	37.9%	0.90	0.34
	1,542.0	100%		0.56

Pre-Development - Total

Roof Bare	878.1	11.6%	0.90	0.10
Green Roof	0.0	0.0%	0.45	0.00
Landscape	5,871.3	77.5%	0.25	0.19
Permeable	0.0	0.0%	0.55	0.00
Hard Surface	828.2	10.9%	0.90	0.10
	7,577.6	100%		0.40

External Areas

Roof Bare	0.0	0.0%	0.90	0.00
Green Roof	0.0	0.0%	0.45	0.00
Landscape	1,838.9	84.9%	0.25	0.21
Permeable	0.0	0.0%	0.55	0.00
Hard Surface	327.8	15.1%	0.90	0.14
	2,166.7	100%		0.35
			100-Yr (x1.25)	0.44

Post-Development Conditions

Post-Development (Uncontrolled to Byngmount)

Roof Bare		0.0%	0.90	0.00
Green Roof		0.0%	0.45	0.00
Landscape	701.8	100.0%	0.25	0.25
Permeable		0.0%	0.55	0.00
Hard Surface		0.0%	0.90	0.00
	701.8	100%		0.25
			100-Yr (x1.25)	0.31

Post-Development (Controlled to Byngmount)

Roof Bare	1,359.5	20.6%	0.90	0.19
Green Roof	800.4	12.1%	0.45	0.05
Landscape	942.6	14.3%	0.25	0.04
Permeable		0.0%	0.55	0.00
Hard Surface	3,504.0	53.0%	0.90	0.48
	6,606.5	100%		0.75
			100-Yr (x1.25)	0.94
			% IMP	77.3

Post-Development (Uncontrolled to East Avenue)

Roof Bare		0.0%	0.90	0.00
Green Roof		0.0%	0.45	0.00
Landscape	52.6	19.5%	0.25	0.05
Permeable		0.0%	0.55	0.00
Hard Surface	216.5	80.5%	0.90	0.72
	269.1	100%		0.77
			100-Yr (x1.25)	0.97

Post-Development

Roof Bare	1,359.5	17.9%	0.90	0.16
Green Roof	800.4	10.6%	0.45	0.05
Landscape	1,697.0	22.4%	0.25	0.06
Permeable	0.0	0.0%	0.55	0.00
Hard Surface	3,720.5	49.1%	0.90	0.44
	7,577.4	100%		0.71
			100-Yr (x1.25)	0.88

958-960 East Avenue
Run-Off Coefficients
City of Mississauga

Designed By: Robert Filipuzzi, P.Eng.
Checked By: Robert Filipuzzi, P.Eng.
File No. 19002
Date: 19 Apr 2021

Treatment area to Tank (no roof)				
Roof Bare		0.0%	0.90	0.00
Green Roof		0.0%	0.45	0.00
Landscape	942.6	21.2%	0.25	0.05
Permeable		0.0%	0.55	0.00
Hard Surface	3,504.0	78.8%	0.90	0.71
	4,446.6	100%		0.76
			100-Yr (x1.25)	0.95
			% IMP	78.8

Roof area to Tank				
Roof Bare	1,359.5	62.9%	0.90	0.57
Green Roof	800.4	37.1%	0.45	0.17
Landscape		0.0%	0.25	0.00
Permeable		0.0%	0.55	0.00
Hard Surface		0.0%	0.90	0.00
	2,159.9	100%		0.73
			100-Yr (x1.25)	0.92
			% IMP	74.3

Future Byngmount Avenue

Future Byngmount Ave. Extenstion

Hard Surface	1,581.1	57.6%	0.90	0.52
Landscape	1,162.7	42.4%	0.25	0.11
	2,743.8	100%		0.62
			100-Yr (x1.25)	0.78

fabian papa & partners
A Division of FP&P HydraTek Inc.
216 Chrislea Road, Suite 204 | Vaughan, Ontario | L4L 8S5 Canada | t: 905-264-2420 | www.fabianpapa.com

958-960 East Avenue

City of Mississauga - Engineering Services Department

STORM SEWER DESIGN SHEET

Designed By: **Robert Filipuzzi, P.Eng.**
Checked By: **Robert Filipuzzi, P.Eng.**
File No.: 19002
Date: 19 April 2021

$I_{2\text{-year}} = \frac{610}{(T+4.6)^{0.78}}$ = 59.89 mm/hr

$I_{5\text{-year}} = \frac{820}{(T+4.6)^{0.78}}$ = 80.51 mm/hr

$I_{10\text{-year}} = \frac{1010}{(T+4.6)^{0.78}}$ = 99.17 mm/hr

$I_{25\text{-year}} = \frac{1160}{(T+4.6)^{0.78}}$ = 113.89 mm/hr

$I_{50\text{-year}} = \frac{1300}{(T+4.7)^{0.78}}$ = 127.13 mm/hr

$I_{100\text{-year}} = \frac{1450}{(T+4.9)^{0.78}}$ = 140.69 mm/hr

Street	From MH	To MH	A (ha)	R	A x R	Accum. A x R	T_c (min)	I (mm/hr)	Q_{act} (L/s)	Size of Pipe (mm)	Slope (%)	Nominal Capacity Q_{cap} (L/s)	Full Flow Velocity (m/s)	Actual Flow Velocity (m/s)	Length (m)	Time in Sect. (min)	Total Time (min)	Q_{act}/Q_{cap}	Remarks
ALLOWABLE RELEASE RATES (2-YEAR FLOWS BASED ON PRE-DEVELOPMENT CONDITIONS)																			
Uncontrolled Sheet Drainage	to Bryngmount Ave. ROW		0.6036	0.35	0.214	0.214	15.0	59.9	**35.6**	←	Allowable Discharge to Bryngmount Storm Sewer								
Uncontrolled Sheet Drainage	to East Ave. ROW		0.1542	0.56	0.086	0.086	15.0	59.9	**14.4**										
			0.7578	0.40	0.300				**50.0**										
Allowable Discharge to Storm Sewer	to East Ave. ROW		0.1542	0.50	0.077	0.077	15.0	59.9	**12.8**	←	Allowable Discharge to East Ave. Storm Sewer (Max. Coefficient = 0.50)								
Allocation to Bryngmount Sewer	to Bryngmount ROW		0.6700	0.60	0.402	0.402	15.0	59.9	**66.9**	←	Allocation to Bryngmount Ave. Storm Sewer (including future roadway and external area)								
2-YEAR POST DEVELOPMENT CONDITIONS **(TO EAST AVENUE)**																			
Uncontrolled Sheet Drainage	Site	East Ave.	0.0269	0.77	0.021	0.021	15.0	59.9	**3.5**	←	26.9% of Allowable Discharge to East Avneue								
2-YEAR POST DEVELOPMENT CONDITIONS **(TO BYNGMOUNT AVENUE)**																			
Unattenuated Flow	Site	Bryngmount Ave.	0.7308	0.70	0.515	0.515	15.0	59.9	85.7	←	Attenuation Required								
100-YEAR	SWM Tank	MH.1	0.6606	0.75	0.497				24.7	250	0.56%	44.5	0.91	0.93	8.9	0.2	15.2	55%	
Uncontrolled Sheet Drainage	to Bryngmount ROW		0.0702	0.25	0.018	0.018	15.0	59.9	2.9										
			0.7308	0.70	0.515				**27.6**	←	77.5% of Allowable Discharge to Bryngmount Storm Sewer								
100-YEAR POST DEVELOPMENT CONDITIONS **(TO EAST AVENUE)**																			
Uncontrolled Sheet Drainage	Site	East Ave.	0.0269	0.77	0.021	0.021	15.0	140.7	**8.1**	←	63.3% of Allowable Discharge to East Avneue								
100-YEAR POST DEVELOPMENT CONDITIONS **(TO BYNGMOUNT AVENUE)**																			
Unattenuated Flow	Site	Bryngmount Ave.	0.7308	0.70	0.515	0.515	15.0	140.7	201.2	←	Attenuation Required								
100-YEAR	SWM Tank	MH.1	0.6606	0.75	0.497				27.0	250	0.56%	44.5	0.91	0.95	8.9	0.2	15.2	61%	
Uncontrolled Sheet Drainage	to Bryngmount ROW		0.0702	0.25	0.018	0.018	15.0	140.7	6.9										
			0.7308	0.70	0.515				**33.8**	←	94.9% of Allowable Discharge to Bryngmount Storm Sewer								
100-YEAR CB GRATE AND LEAD CAPACITY																			
										Depth of Ponding (m)	Inlet Capture (L/s)	50% Clogging (L/s)							
	CB.1	MH.2	0.1043	0.77	0.081	0.081	15.0	140.7	31.6	0.30	201.8	100.9	50% Capacity > 100-yr flow, therefore OK						
									31.6	200	2.5	51.9	1.65	1.73	22.2	0.2	0.2	0.61	
	CB.2	MH.2	0.1174	0.77	0.091	0.091	15.0	140.7	35.4	0.15	119.9	59.9	50% Capacity > 100-yr flow, therefore OK						
									35.4	250	1.1	62.4	1.27	1.30	4.6	0.1	0.1	0.57	

fabian papa & partners
A Division of FP&P HydraTek Inc.
216 Chrislea Road, Suite 204 | Vaughan, Ontario | L4L 8S5 Canada | t: 905-264-2420 | www.fabianpapa.com

958-960 East Avenue

City of Mississauga - Engineering Services Department

STORM SEWER DESIGN SHEET

Designed By: **Robert Filipuzzi, P.Eng.**
Checked By: **Robert Filipuzzi, P.Eng.**
File No.: 19002
Date: 19 April 2021

$I_{2\text{-year}} = \frac{610}{(T+4.6)^{0.78}}$ = 59.89 mm/hr

$I_{5\text{-year}} = \frac{820}{(T+4.6)^{0.78}}$ = 80.51 mm/hr

$I_{10\text{-year}} = \frac{1010}{(T+4.6)^{0.78}}$ = 99.17 mm/hr

$I_{25\text{-year}} = \frac{1160}{(T+4.6)^{0.78}}$ = 113.89 mm/hr

$I_{50\text{-year}} = \frac{1300}{(T+4.7)^{0.78}}$ = 127.13 mm/hr

$I_{100\text{-year}} = \frac{1450}{(T+4.9)^{0.78}}$ = 140.69 mm/hr

Street	From MH	To MH	A (ha)	R	A x R	Accum. A x R	T_c (min)	I (mm/hr)	Q_{act} (L/s)	Size of Pipe (mm)	Slope (%)	Nominal Capacity Q_{cap} (L/s)	Full Flow Velocity (m/s)	Actual Flow Velocity (m/s)	Length (m)	Time in Sect. (min)	Total Time (min)	Q_{act}/Q_{cap}	Remarks
	CB.3	Building	0.0624	0.75	0.047	0.047	15.0	140.7	18.4	0.15	119.9	59.9	50% Capacity > 100-yr flow, therefore OK						
									18.4	250	1.0	59.5						0.31	
	CB.4	Building	0.0138	0.79	0.011	0.011	15.0	140.7	4.3	0.25	180.9	90.4	50% Capacity > 100-yr flow, therefore OK						
									4.3	200	2.4	50.8	1.62	0.96	4.2	0.0	0.0	0.08	
	CB.5	Building	0.0093	0.71	0.007	0.007	15.0	140.7	2.6	0.25	180.9	90.4	50% Capacity > 100-yr flow, therefore OK						
									2.6	200	2.4	50.8	1.62	0.84	4.2	0.0	0.0	0.05	
	CB.6	Building	0.0145	0.74	0.011	0.011	15.0	140.7	4.2	0.20	156.9	78.5	50% Capacity > 100-yr flow, therefore OK						
									4.2	200	2.4	50.8	1.62	0.96	4.2	0.0	0.0	0.08	
Building Sewer Sizing																			
Surface areas to Tank	2-Year Flow to Filter		0.4447	0.76	0.339	0.339	15.0	59.9	56.4	375	1.0%	175.3	1.59	1.40				32%	
	100-Year Flow to Filter		0.4447	0.76	0.339	0.339	15.0	140.7	132.5	375	1.0%	175.3	1.59	1.74				76%	
Roof areas to Tank	2-Year Flow to Filter		0.2160	0.73	0.158	0.158	15.0	59.9	26.3	300	1.0%	96.7	1.37	1.15				27%	
	100-Year Flow to Filter		0.2160	0.73	0.158	0.158	15.0	140.7	61.9	300	1.0%	96.7	1.37	1.45				64%	
100-YEAR STORM SEWER DESIGN																			
	CB.1	MH.2	0.1293	0.77	0.100	0.100	15.0	140.7	39.1	250	0.67%	48.7	0.99	1.10	22.2	0.4	15.4	80%	
	CB.2	MH.2	0.1466	0.77	0.113	0.113	15.0	140.7	44.1	250	1.1%	62.4	1.27	1.38	4.6	0.1	15.1	71%	
	MH.2	TANK				0.213	15.4	138.7	82.1	300	1.7%	126.1	1.78	1.89	2.9	0.0	15.0	65%	
External Area North of Site	Ex. Swale	MH.1	0.2167	0.35	0.075	0.075	15.0	99.2	20.8	375	0.70%	146.7	1.33	0.93	57.5	0.7	15.7	14%	Existing sewer
Proposed Development	MH.2	MH.1	0.7308	0.70	0.515				19.3	250	0.56%	44.5	0.91	0.87	8.9	0.2	15.2	43%	Control 10-Yr Flow
Future Bryngmount Ave.	MH.1	EX.MH	0.2744	0.62	0.171	0.247	15.0	99.2	87.3	375	0.35%	103.7	0.94	1.05	73.3	1.3	16.3	84%	

958-960 East Avenue Redevelopment

Stormwater Storage Calculations using Rational Method

2-year Storm - City of Mississauga

SWM Tank Design

$$I_{2-yr} = \frac{610}{(T+4.6)^{0.78}} = 59.9\,mm/hr$$

Project No.	**19002**	Area (ha)	0.6606
Analysis By:	**Robert Filipuzzi**	Total Runoff Coefficient	0.75
Last Revised:	**19 April 2021**	Maximum Site Discharge (L/s)	24.7

Time (min)	Intensity (mm/hr)	Q_T-2 (L/s)	Q-stored (L/s)	Storage Volume (cu.m)
0	0.0	0.0	0.0	0.0
15	59.9	82.7	58.0	52.2
20	50.2	69.3	44.6	53.5
30	38.4	53.1	28.4	51.2
40	31.5	43.6	18.9	45.3
50	26.9	37.2	12.5	37.6
60	23.6	32.6	7.9	28.6
70	21.1	29.2	4.5	18.8
80	19.1	26.4	1.8	8.4
90	17.5	24.2	0.0	0.0
100	16.2	22.4	0.0	0.0
110	15.1	20.9	0.0	0.0
120	14.2	19.5	0.0	0.0
130	13.3	18.4	0.0	0.0
140	12.6	17.4	0.0	0.0
150	12.0	16.5	0.0	0.0
160	11.4	15.7	0.0	0.0
170	10.9	15.0	0.0	0.0
180	10.4	14.4	0.0	0.0
190	10.0	13.8	0.0	0.0
200	9.6	13.3	0.0	0.0
210	9.3	12.8	0.0	0.0
220	8.9	12.3	0.0	0.0
230	8.6	11.9	0.0	0.0
240	8.4	11.6	0.0	0.0
250	8.1	11.2	0.0	0.0
260	7.9	10.9	0.0	0.0
270	7.6	10.6	0.0	0.0
280	7.4	10.3	0.0	0.0
290	7.2	10.0	0.0	0.0
300	7.0	9.7	0.0	0.0
310	6.9	9.5	0.0	0.0
320	6.7	9.3	0.0	0.0
330	6.5	9.0	0.0	0.0
340	6.4	8.8	0.0	0.0
350	6.3	8.6	0.0	0.0
360	6.1	8.5	0.0	0.0

Storage Volume Required (cu.m)	**53.5**
Storage Volume Provided (cu.m)	**197.5**

Bases on Pump:

Barnes 3SE-L Pump with 6.5" Impeller

(or equivalent)

100-Yr Depth (m)	**0.70**
Total Pump Head (m)	**2.30**
Maximum Discharge Flow (L/s)	**24.7**

Outlet Type	**Pumped**

fabian papa & partners

A Division of FP&P HydraTek Inc.

216 Chrislea Road, Suite 204 | Vaughan ON | L4L 8S5 Canada | t: 905-264-2420 | www.fabianpapa.com

958-960 East Avenue Redevelopment

Stormwater Storage Calculations using Rational Method

100-year Storm - City of Mississauga

SWM Tank Design

$$I_{100-yr} = \frac{1450}{(T+4.9)^{0.78}} = 140.7\,mm/hr$$

Project No.	**19002**		Area (ha)	0.6606
Analysis By:	**Robert Filipuzzi**		Total Runoff Coefficient	0.75
Last Revised:	**19 April 2021**		Maximum Site Discharge (L/s)	27.0

Time (min)	Intensity (mm/hr)	Q-100 (L/s)	Q-stored (L/s)	Storage Volume (cu.m)
0	0.0	0.0	0.0	0.0
15	140.7	194.3	167.4	150.6
20	118.1	163.2	136.2	163.4
30	90.8	125.4	98.4	177.2
40	74.6	103.0	76.1	182.5
50	63.8	88.1	61.1	183.3
60	56.0	77.3	50.3	181.2
70	50.0	69.1	42.1	177.0
80	45.4	62.7	35.7	171.4
90	41.6	57.5	30.5	164.7
100	38.5	53.1	26.2	157.1
110	35.8	49.5	22.5	148.7
120	33.6	46.4	19.4	139.8
130	31.6	43.7	16.7	130.3
140	29.9	41.3	14.3	120.5
150	28.4	39.2	12.2	110.2
160	27.0	37.3	10.4	99.6
170	25.8	35.7	8.7	88.8
180	24.7	34.2	7.2	77.6
190	23.7	32.8	5.8	66.3
200	22.8	31.5	4.6	54.7
210	22.0	30.4	3.4	43.0
220	21.2	29.3	2.4	31.0
230	20.5	28.3	1.4	18.9
240	19.9	27.4	0.5	6.7
250	19.2	26.6	0.0	0.0
260	18.7	25.8	0.0	0.0
270	18.1	25.1	0.0	0.0
280	17.6	24.4	0.0	0.0
290	17.2	23.7	0.0	0.0
300	16.7	23.1	0.0	0.0
310	16.3	22.5	0.0	0.0
320	15.9	22.0	0.0	0.0
330	15.6	21.5	0.0	0.0
340	15.2	21.0	0.0	0.0
350	14.9	20.5	0.0	0.0
360	14.6	20.1	0.0	0.0

Storage Volume Required (cu.m)	**183.3**
Storage Volume Provided (cu.m)	**197.5**

Bases on Pump:

Barnes 3SE-L Pump with 6.5" Impeller

(or equivalent)

100-Yr Depth (m)	**2.41**
Total Pump Head (m)	**0.59**
Maximum Discharge Flow (L/s)	**27.0**

Outlet Type	**Pumped**

fabian papa & partners

A Division of FP&P HydraTek Inc.

216 Chrislea Road, Suite 204 | Vaughan ON | L4L 8S5 Canada | t: 905-264-2420 | www.fabianpapa.com

Series 3SE-L

2½" Spherical Solids Handling
Single Seal

I&O Manual

1½", 2" & 3" Discharge

DISCHARGE		3" NPT, Vertical 3" Flanged, Horizontal
LIQUID TEMPERATURE		104°F (40°C) Continuous
VOLUTE		Cast Iron ASTM, Class 30
MOTOR HOUSING		Cast Iron ASTM, Class 30
SEAL PLATE		Cast Iron ASTM A-48, Class 30
IMPELLER:	*Design*	2 Vane, Semi-open with pump out vanes on back side. Dynamically balanced, ISO G6.3
	Material	Cast Iron, Class 30
SHAFT		416 Stainless Steel
SQUARE RINGS		Buna-N
HARDWARE		300 Series Stainless Steel
PAINT		Air Dry Enamel
SEAL:	*Design*	Single Mechanical
	Material	Carbon/Ceramic/Buna-N Hardware -300 Series Stainless
CORD ENTRY		30 ft. (9.1m) Cord. Quick connect custom molded for sealing and strain relief
SPEED		1750 RPM (Nominal), 60Hz
UPPER BEARING		Single Row, Ball, Oil lubricated
	Load	Radial
LOWER BEARING		Single Row, Ball, Oil lubricated
	Load	Radial & Thrust
MOTOR:	*Design*	NEMA L -Single Phase, NEMA B -Three phase Torque Curve, Oil Filled, Squirrel Cage Induction
	Insulation	Class B Class F on selected models
SINGLE PHASE		Permanent Split Capacitor (PSC) Includes Overload Protection in Motor
THREE PHASE		200-230/460 is Tri-Voltage. 575. Requires Overload Protection to be included in control panel
OPTIONAL EQUIPMENT		Seal Material, Impeller Trims, Additional cord. Normally closed temperature sensor with cord for 3 Phase pumps (Requires relay in control panel)

RECOMMENDED:

Accessories	Break Away Fitting (BAF) Check Valve Control Panel
Seal Kit PN	130181
Service Kit PN	130208

C US LR16567

SSPMA CERTIFIED

SWPA MEMBER

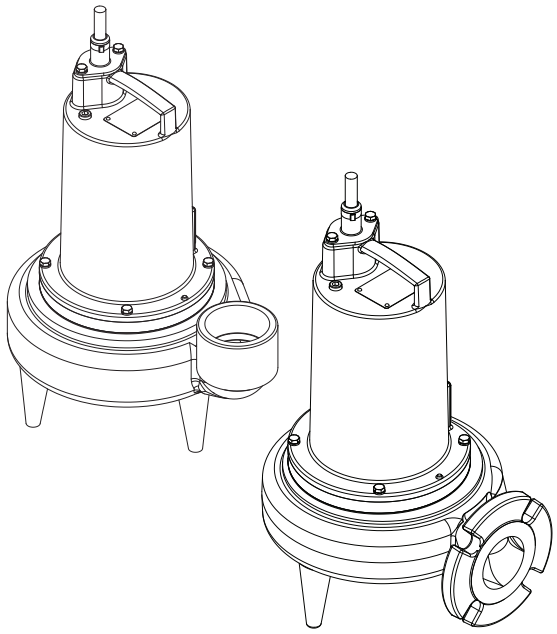

Series: 3SE-L
1.5 & 2HP, 1750RPM, 60Hz

Series: 3SEH-L
2HP, 1750RPM, 60Hz

Sample Specifications

DESCRIPTION:

SUBMERSIBLE NON-CLOG SEWAGE PUMP DESIGNED FOR TYPICAL RAW SEWAGE APPLICATIONS

WARNING:
CANCER AND REPRODUCTIVE HARM - WWW.P65WARNINGS.CA.GOV

Series 3SE-L

2½" Spherical Solids Handling
Single Seal

BARNES®

www.cranepumps.com

1½", 2" & 3" Discharge

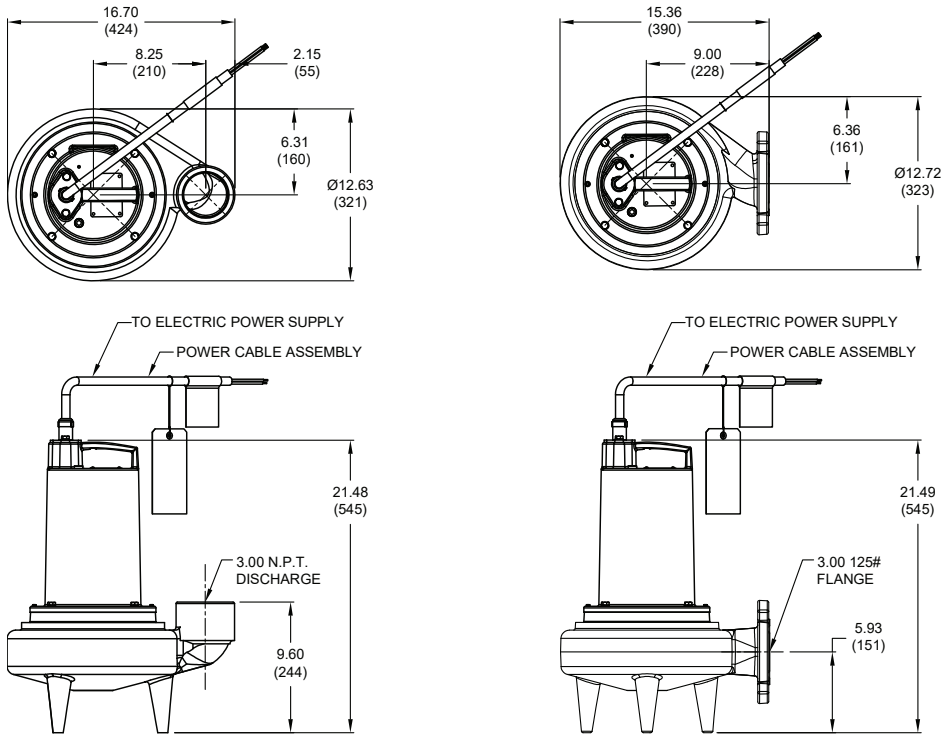

MODEL NO	PART NO	HP	VOLT/PH	Hz	RPM (Nom)	NEMA START CODE	INSUL. CLASS	FULL LOAD AMPS	LOCKED ROTOR AMPS	CORD SIZE	CORD TYPE	CORD O.D inch (mm)
VERTICAL Series												
3SE1524L	132725	1.5	230/1	60	1750	C	F	16.0	44.6	12/3	SOOW/SOW	0.610 (15.5)
3SE1594L	132730	1.5	200-230/3	60	1750	D/G	F	13.3/11.6	35.8/41.2	12/4	SOOW/SOW	0.680 (17.4)
3SE1544L	132735	1.5	460/3	60	1750	G	F	5.8	20.6	14/4	SOOW/SOW	0.570 (14.5)
3SE1554L	132740	1.5	575/3	60	1750	G	B	4.6	16.4	14/4	SOOW/SOW	0.570 (14.5)
3SE2024L	132750	2.0	230/1	60	1750	A	F	19.0	44.6	10/3	SOOW/SOW	0.660 (16.8)
3SE2094L	132752	2.0	200-230/3	60	1750	B/D	F	15.2/13.2	35.8/41.2	12/4	SOOW/SOW	0.680 (17.4)
3SE2044L	132754	2.0	460/3	60	1750	D	F	6.6	20.6	14/4	SOOW/SOW	0.570 (14.5)
3SE2054L	132756	2.0	575/3	60	1750	D	B	5.2	16.4	14/4	SOOW/SOW	0.570 (14.5)
HORIZONTAL Series												
3SEH1524L	132725H	1.5	230/1	60	1750	C	F	14.4/17.6	44.6	12/3	SOOW/SOW	0.610 (15.5)
3SEH1594L	132730H	1.5	208-230/3	60	1750	C	F	12.0/14.6-10.5/12.8	35.8/41.2	12/4	SOOW/SOW	0.680 (17.4)
3SEH1544L	132735H	1.5	460/3	60	1750	C	F	5.2/6.4	20.6	14/4	SOOW/SOW	0.570 (14.5)
3SEH1554L	132740H	1.5	575/3	60	1750	C	B	4.1/5.1	16.4	14/4	SOOW/SOW	0.570 (14.5)
3SEH2024L	132750H	2.0	230/1	60	1750	A	F	19.0	44.6	10/3	SOOW/SOW	0.660 (16.8)
3SEH2094L	132752H	2.0	200-230/3	60	1750	B/D	F	15.2/13.2	35.8/41.2	12/4	SOOW/SOW	0.680 (17.4)
3SEH2044L	132754H	2.0	460/3	60	1750	D	F	6.6	20.6	14/4	SOOW/SOW	0.570 (14.5)
3SEH2054L	132756H	2.0	575/3	60	1750	D	B	4.7/5.7	16.4	14/4	SOOW/SOW	0.570 (14.5)

Optional - Temperature Sensor Cord for 3 Phase models are 14/3 & 18/5. SOOW / SOW, 0.530 (13.5mm) / 0.470 (11.9mm) O.D.

IMPORTANT !

1.) PUMP MAY BE OPERATED "DRY" FOR EXTENDED PERIODS WITHOUT DAMAGE TO MOTOR AND/OR SEALS.
2.) INSTALLATIONS SUCH AS DECORATIVE FOUNTAINS OR WATER FEATURES PROVIDED FOR VISUAL ENJOYMENT MUST BE INSTALLED IN ACCORDANCE WITH THE NATIONAL ELECTRIC CODE ANSI/NFPA 70 AND/OR THE AUTHORITY HAVING JURISDICTION. THIS PUMP IS NOT INTENDED FOR USE IN SWIMMING POOLS, RECREATIONAL WATER PARKS, OR INSTALLATIONS IN WHICH HUMAN CONTACT WITH PUMPED MEDIA IS A COMMON OCCURRENCE.

CRANE®
A Crane Co. Company

PUMPS & SYSTEMS

USA: (937) 778-8947 • Canada: (905) 457-6223 • International: (937) 615-3598

BARNES®

www.cranepumps.com

Series 3SE-L

Performance Curve

1.5 & 2.0HP, 1750RPM, 60Hz

1½", 2" & 3" Discharge

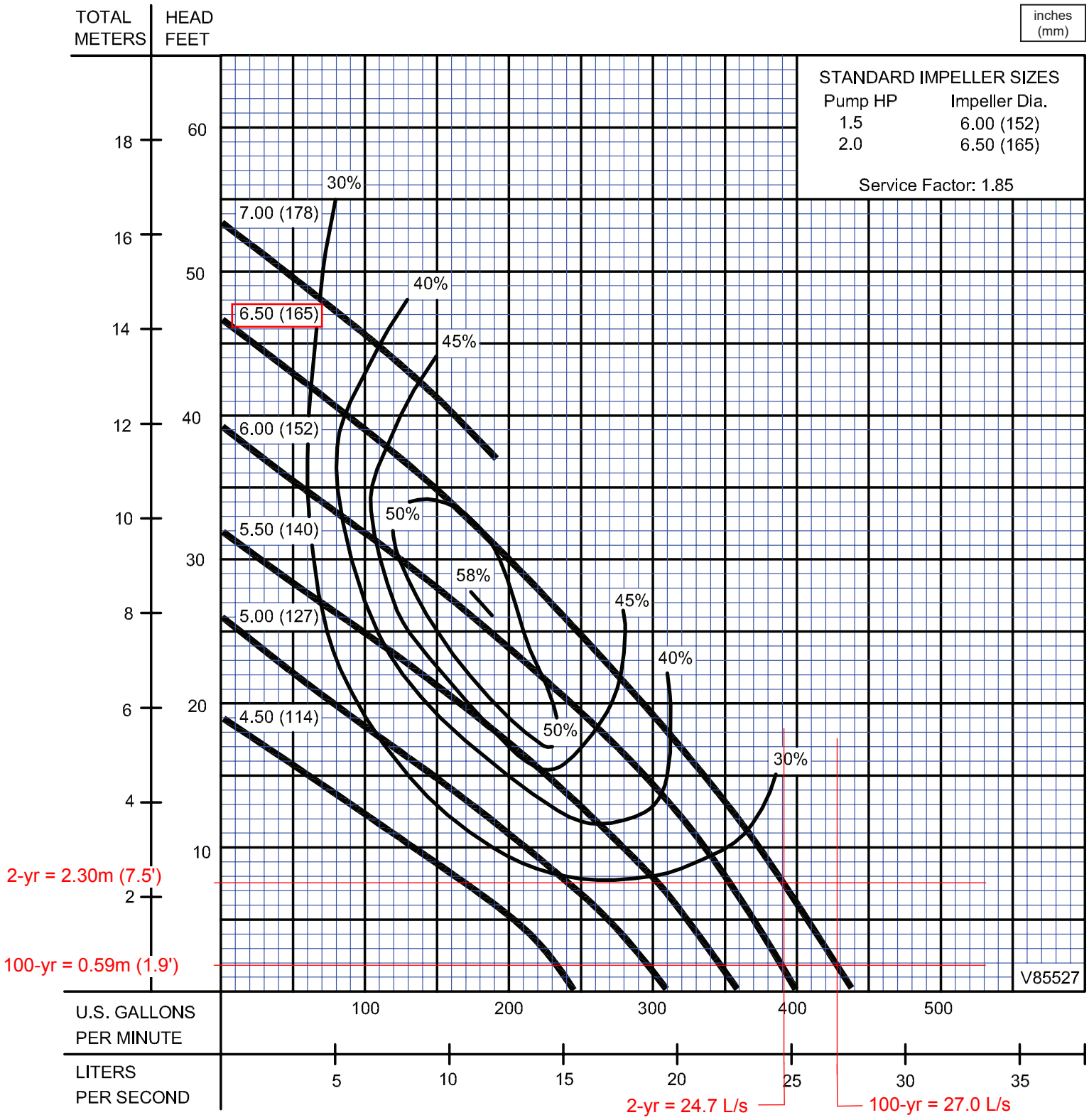

Testing is performed with water, specific gravity 1.0 @ 68° F @ (20°C), other fluids may vary performance

958-960 East Avenue

Water Quality, and Water Balance

City of Mississauga

Designed By: Robert Filipuzzi, P.Eng.
Checked By: Robert Filipuzzi, P.Eng.
File No. 19002
Date: 19 April 2021

Water Quality (TSS Removal)

Inferred TSS Removal (without treatment)

Roof Bare	1,359.5	17.9%	95	17.0
Green Roof	800.4	10.6%	100	10.6
Landscape	754.4	10.0%	100	10.0
Permeable	0.0	0.0%	80	0.0
Hard Surface	4,663.1	61.5%	0	0.0
	7,577.4	100%		37.6

Achieved TSS Removal - WITH Treatment

Roof Bare	1,359.5	17.9%	95	17.0
Green Roof	800.4	10.6%	100	10.6
Landscape	754.4	10.0%	100	10.0
Permeable	0.0	0.0%	80	0.0
Hard Surface	216.5	2.9%	0	0.0
Treated Surface*	4,446.6	58.7%	80	46.9
	7,577.4	100%		84.5

**Surface areas to be directed to filter treatment within SWM tank for treatment*

Water Balance

Volume Required

Required Water Balance (mm):	5.0
Site Area (m^2):	7577.4
Required Water Balance Volume (m^3):	37.9

Initial Abstraction

Roof Bare	1,359.5	17.9%	1	0.2
Green Roof	800.4	10.6%	5	0.5
Landscape	754.4	10.0%	5	0.5
Permeable	0.0	0.0%	5	0.0
Hard Surface*	4,663.1	61.5%	1	0.6
	7,577.4	100%		1.8

Infiltration Gallery

Area of Infiltration Gallery (m^2):	0.0
Depth of Stone (m):	0.30
Void Ratio:	0.40
Volume Retained in Stone (m^3):	0.0

Water Re-Use

Area of SWM Tank (m^2):	76.0
Depth of Sump (m):	0.50
Volume Retained in Tank (m^3):	38.0

← Water Re-Use Volume to be used for irrigation

Total Volume Retained

Initial Abstraction + Infiltration + Water Re-Use (m^3):	39.8

← Water Balance Volume is Satisfied.

Volume Retained > Volume Required

39.8 > 37.9

fabian papa & partners
A Division of FP&P HydraTek Inc.
216 Chrislea Road, Suite 204 | Vaughan, Ontario | L4L 8S5 Canada | t: 905-264-2420 | www.fabianpapa.com

Determining Number of Cartridges for Flow Based Systems

Date	**05/11/2020**	**Black Cells =**	**Calculation**

Site Information

Project Name	**958 East Ave.**		
Project Location	**Mississauga**		
OGS ID	**Full Site**		
Drainage Area, Ad	**1.11**	ac	(0.4513 ha)
Impervious Area, Ai	**0.87**	ac	
Pervious Area, Ap	**0.25**		
% Impervious	**78%**		
Runoff Coefficient, Rc	**0.76**		
Treatment storm flow rate, Q_{treat}	**0.42**	cfs	(11.86 L/s)
Peak storm flow rate, Q_{peak}	**4.76**	cfs	(134.8 L/s)

Filter System

Filtration brand	**StormFilter**	
Cartridge height	**18**	in
Specific Flow Rate	**2.00**	gpm/ft^2
Flow rate per cartridge	**15.00**	gpm

SUMMARY

Number of Cartridges	15
Media Type	Perlite

Event Mean Concentration (EMC)	**150**	mg/L
Annual TSS Removal	**80%**	
Percent Runoff Capture	**90%**	

Recommend SF0811 vault in line

©2012 CONTECH Engineered Solutions
conteches.com

200 Enterprise Drive
Scarborough, ME 04074
Phone 877-907-8676
Fax 207-885-9825

APPENDIX F

BENCH MARK:

ELEVATIONS SHOWN HEREON ARE GEODETIC AND IN METERES AND ARE RELATED TO THE MINISTRY OF TRANSPORTATION BENCHMARK NO. 008197580569 HAVING A PUBLISHED ELEVATION OF 251.26. REFER TO ORIGINAL TOPOGRAPHICAL SURVEY DRAWINGS BY YONGE AND YOUNG SURVEYING INC.

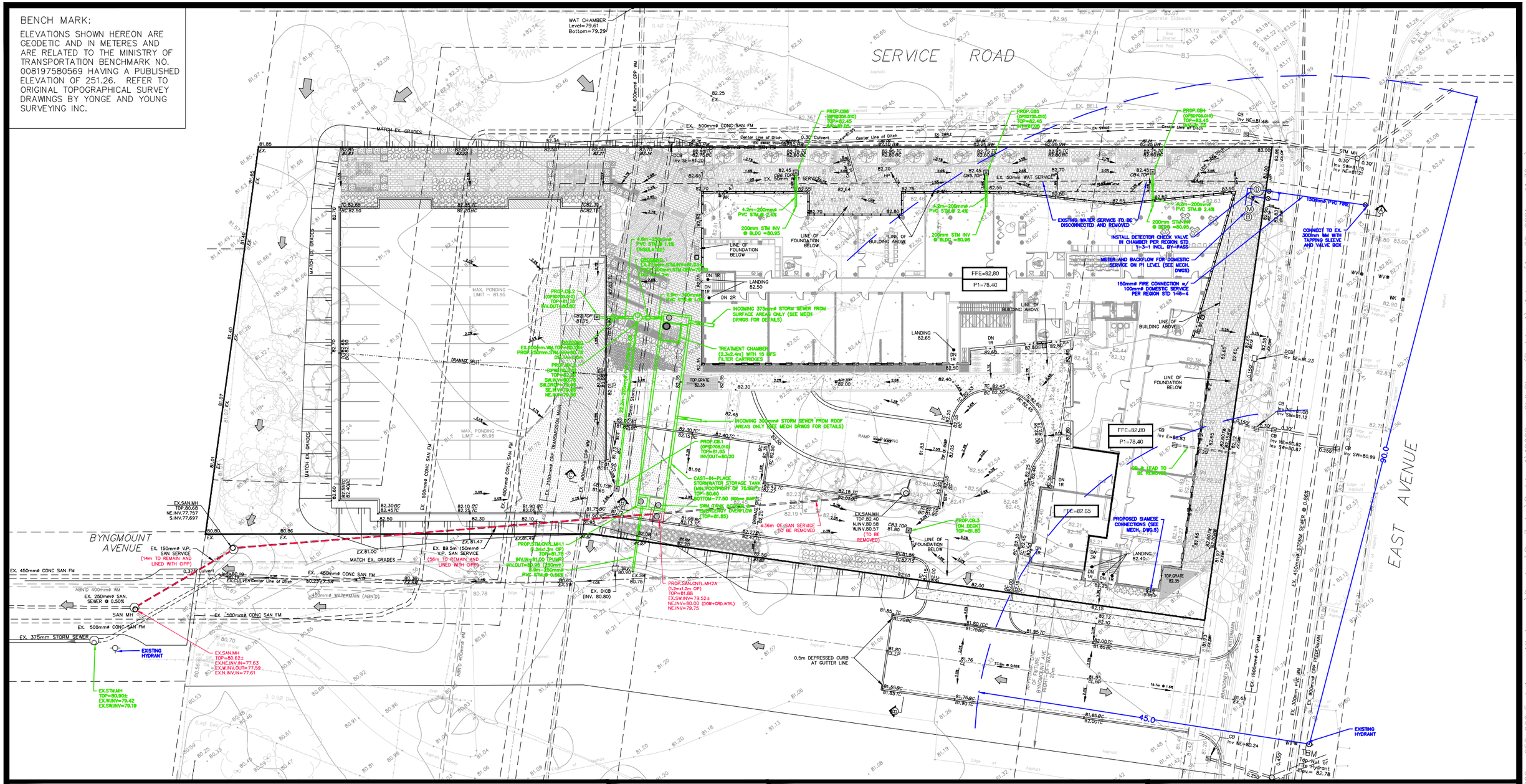

LEGEND

AD.1	PROP AREA DRAIN	FFE=93.74	PROP FINISHED FIRST FLOOR ELEV.
CB.1	PROP CATCHBASIN	P1=93.37	PROP FINISHED P1 ELEV.
MH.1	PROP STORM MANHOLE	⊗	PROP VALVE AND BOX
MH.1A	PROP SANITARY MANHOLE		PROP WATER SERVICE CONNECTION
	PROP HYDRANT		PROP SANITARY SEWER / SERVICE
			PROP STORM SEWER / SERVICE

DWN. BY:	R.D.F.
DESIGNED BY:	R.D.F.
CHECKED BY:	R.D.F.
SCALE:	1:500
DATE:	20 APR 2021
SHEET NO:	1 OF 3

fabian papa & partners
A Division of FP&P HydraTek Inc.
216 Chrislea Road, Suite 204
Vaughan, Ontario, L4L 8S5
t: 905-264-2420
www.fabianpapa.com

PROJECT NO:	DWG NO:	REV NO:
19002	SSG-1	1

PROJECT NAME:

958-960 EAST AVENUE
RESIDENTIAL DEVELOPMENT

DRAWING TITLE:

SITE SERVICING & GRADING SCHEMATIC

H:\FP&P HydraTek\Projects\2019\19002 - 958-960 East Avenue, Mississauga\Drawings\Re-Zoning\Revision 1\19002 - Civil Plans (Revision 1) v1.dwg (Apr 20, 2021 - 11:30am)

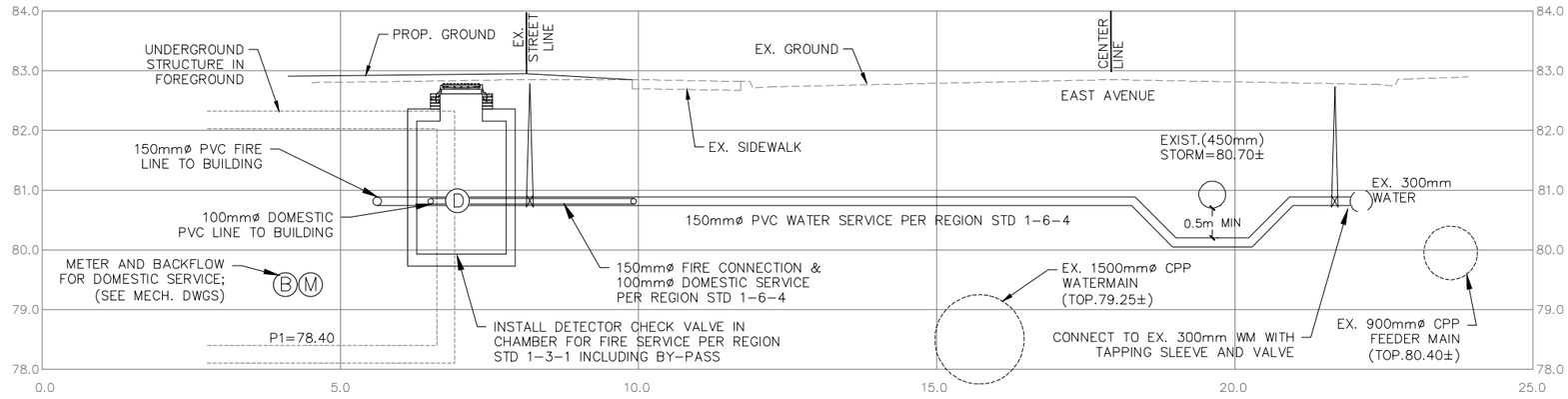

SECTION A: WATER SERVICE

SCALE: 1:100 HORIZ.
1:100 VERT.

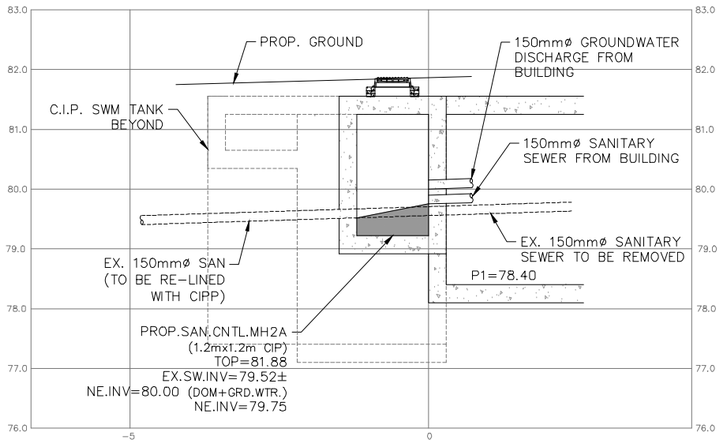

SECTION B: SANITARY SERVICE

SCALE: 1:100 HORIZ.
1:100 VERT.

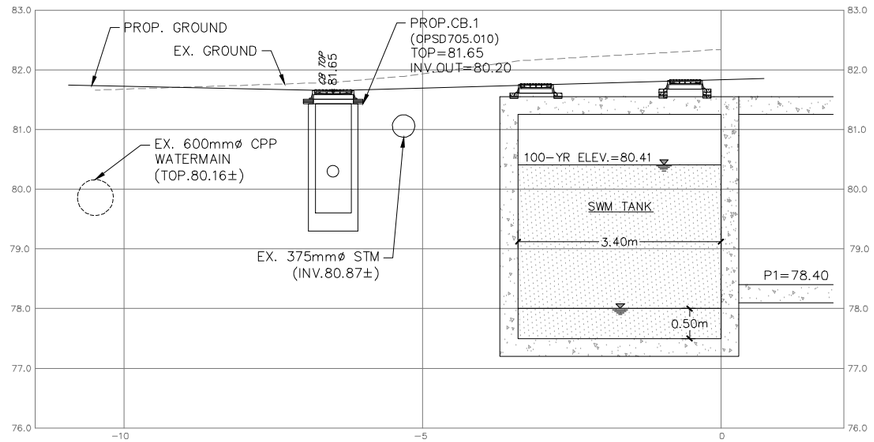

SECTION C: CATCHBASIN 1

SCALE: 1:100 HORIZ.
1:100 VERT.

LEGEND

AD.1	PROP AREA DRAIN	FFE=93.74	PROP FINISHED FIRST FLOOR ELEV.
CB.1	PROP CATCHBASIN	P1=93.37	PROP FINISHED P1 ELEV.
MH.1	PROP STORM MANHOLE	⊗	PROP VALVE AND BOX
MH.1A	PROP SANITARY MANHOLE		PROP WATER SERVICE CONNECTION
	PROP HYDRANT		PROP SANITARY SEWER / SERVICE
			PROP STORM SEWER / SERVICE

DWN. BY:	R.D.F.
DESIGNED BY:	R.D.F.
CHECKED BY:	R.D.F.
SCALE:	AS NOTED
DATE:	20 APR 2021
SHEET NO:	2 OF 3

fabian papa & partners
A Division of FP&P HydraTek Inc.
216 Chrislea Road, Suite 204
Vaughan, Ontario, L4L 8S5
t: 905-264-2420
www.fabianpapa.com

PROJECT NO:	DWG NO:	REV NO:
19002	DET-1	1

PROJECT NAME:
958-960 EAST AVENUE
RESIDENTIAL DEVELOPMENT

DRAWING TITLE:
SITE SERVICING SECTIONS

H:\FP&P HydraTek\Projects\2019\19002 - 958-960 East Avenue, Mississauga\Drawings\Re-Zoning\Revision 1\19002 - Civil Plans (Revision 1) v1.dwg (Apr 20, 2021 - 11:32am)

SWM TANK NOTES:
1. CHAMBER WALLS TO BE WATERPROOFED.
2. SEE STRUCTURAL DWGS. FOR WALL THICKNESS AND DESIGN.
3. LADDER AT ALL ACCESS POINTS PER OPSD 406.010.

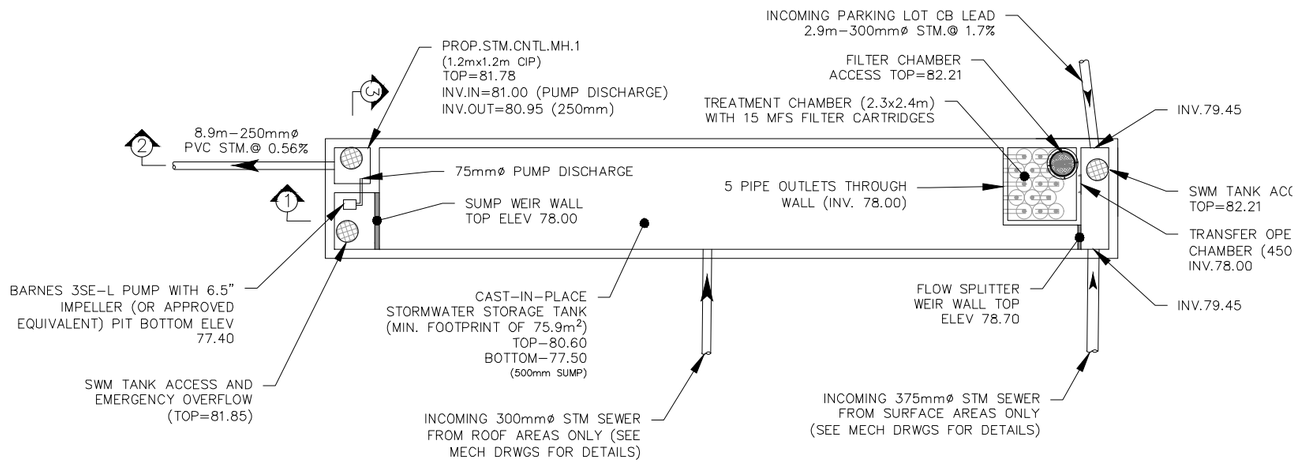

SWM TANK LAYOUT DETAILS

SCALE: 1:200

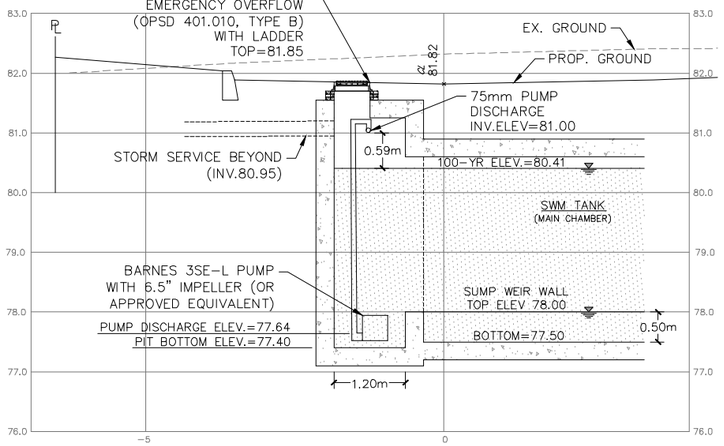

SECTION 1: PUMP PIT CROSS–SECTION

SCALE: 1:100 HORIZ.
1:100 VERT.

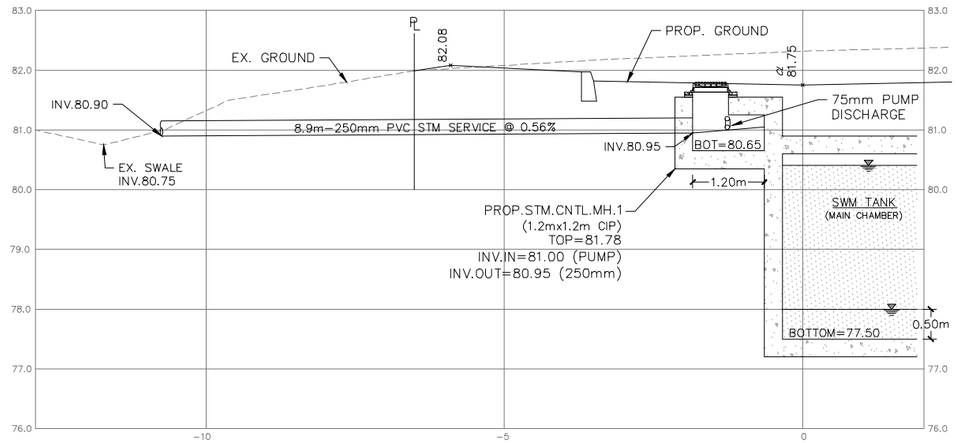

SECTION 2: STM CONTROL MH CROSS–SECTION

SCALE: 1:100 HORIZ.
1:100 VERT.

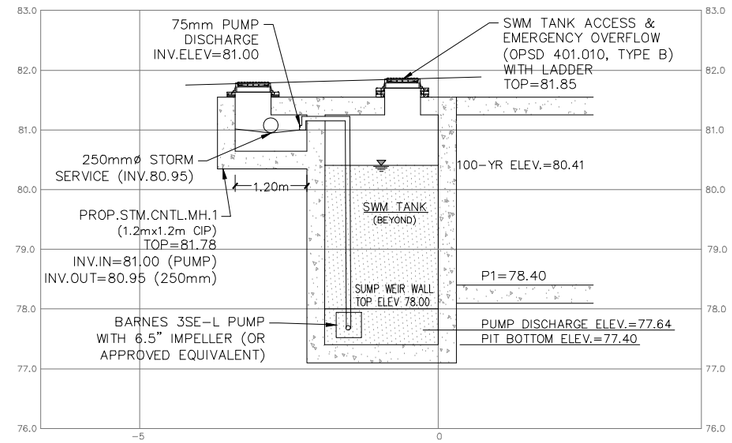

SECTION 3: PUMP PIT & MH CROSS–SECTION

SCALE: 1:100 HORIZ.
1:100 VERT.

LEGEND

AD.1	PROP AREA DRAIN	FFE=93.74	PROP FINISHED FIRST FLOOR ELEV.
CB.1	PROP CATCHBASIN	P1=93.37	PROP FINISHED P1 ELEV.
MH.1	PROP STORM MANHOLE	⊗	PROP VALVE AND BOX
MH.1A	PROP SANITARY MANHOLE		PROP WATER SERVICE CONNECTION
	PROP HYDRANT		PROP SANITARY SEWER / SERVICE
			PROP STORM SEWER / SERVICE

DWN. BY:	R.D.F.
DESIGNED BY:	R.D.F.
CHECKED BY:	R.D.F.
SCALE:	AS NOTED
DATE:	20 APR 2021
SHEET NO:	3 OF 3

fabian papa & partners
A Division of FP&P HydraTek Inc.
216 Chrislea Road, Suite 204
Vaughan, Ontario, L4L 8S5
t: 905-264-2420
www.fabianpapa.com

PROJECT NO:	DWG NO:	REV NO:
19002	DET–2	1

PROJECT NAME:
958–960 EAST AVENUE
RESIDENTIAL DEVELOPMENT

DRAWING TITLE:
SWM TANK DETAILS

H:\FP&P HydraTek\Projects\2019\19002 – 958–960 East Avenue, Mississauga\Drawings\Re–Zoning\Revision 1\19002 – Civil Plans (Revision 1) v1.dwg (Apr 20, 2021 – 11:33am)