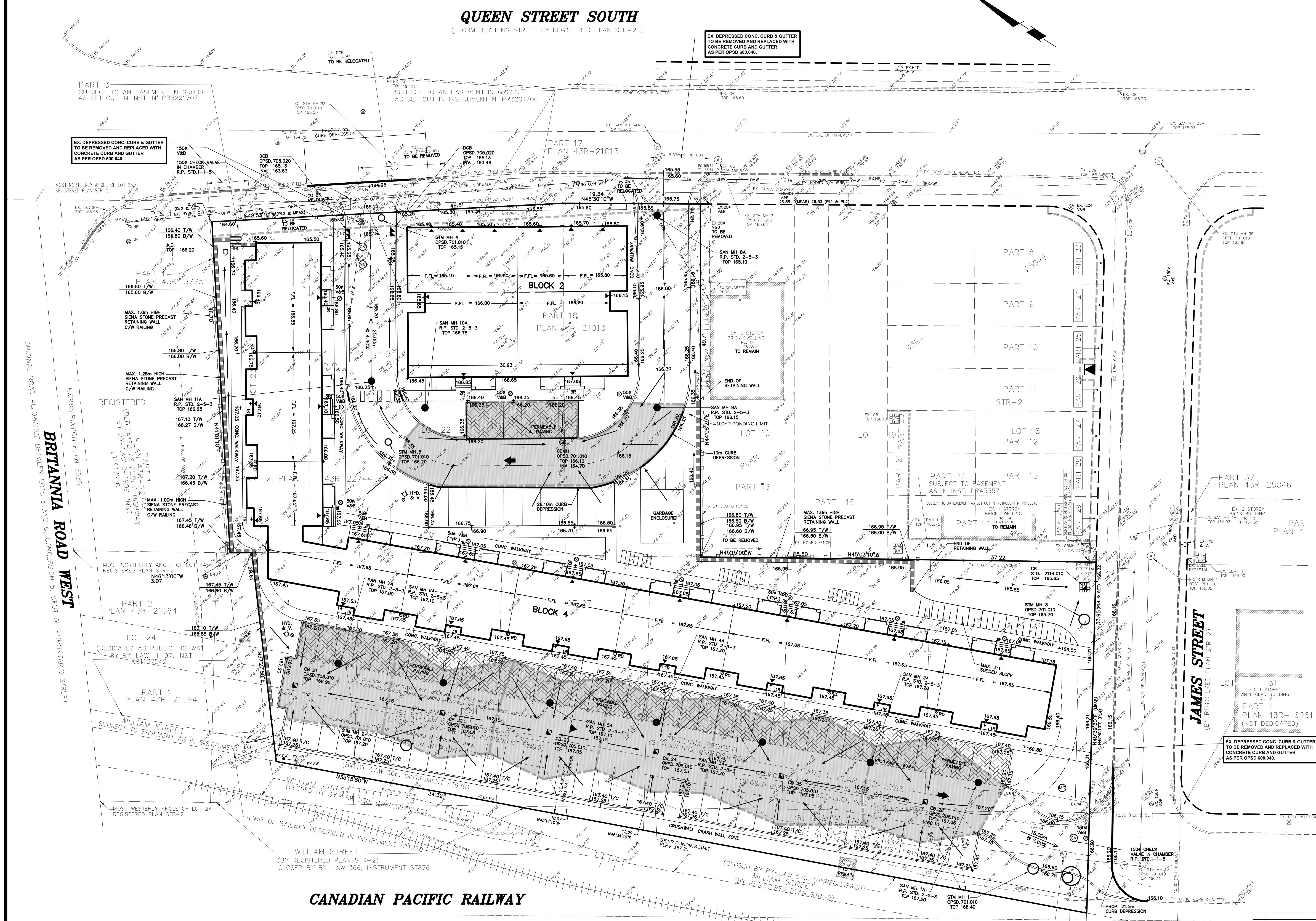

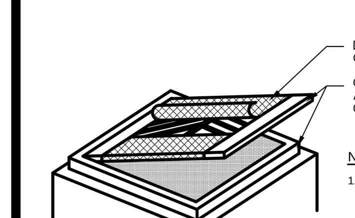

NOTE

1. TO BE USED UNDER APPROPRIATE DRAINAGE CIRCUMSTANCES, BETWEEN APRIL AND DECEMBER.
2. WOVEN GEOTEXTILE TO HAVE EQUIVALENT OPENING SIZE OF 0.15mm AND A MAXIMUM EQUIVALENT OPENING SIZE OF 0.25mm.
3. WOVEN GEOTEXTILE TO BE REPLACED PERIODICALLY WHEN ACCUMULATED SEDIMENTS INTERFERES WITH DRAINAGE.

ROADSIDE CATCHBASIN SEDIMENT PROTECTION DETAIL

N.T.S.

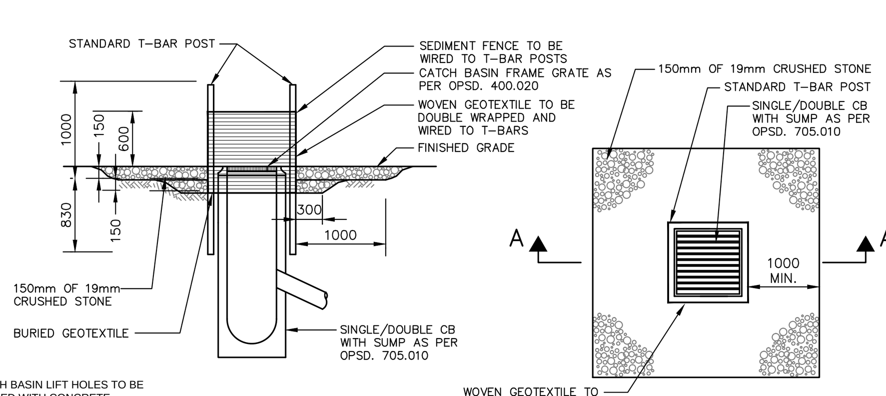

NOTES:

1. CATCH BASIN LIFT HOLES TO BE PARGED WITH CONCRETE.
2. WOVEN GEOTEXTILE TO HAVE AN EQUIVALENT OPENING SIZE OF 0.15mm AND A MAXIMUM EQUIVALENT OPENING SIZE OF 0.25mm.

CATCHBASIN SEDIMENT CONTROL DETAIL

N.T.S.

ALL INTERNAL EXISTING SERVICES AND APPURTENANCES NOT UTILIZED FOR SERVICING OF THIS PROJECT ARE TO BE REMOVED OFF SITE UNLESS OTHERWISE DIRECTED BY THE ENGINEER.

INFORMATION SHOWN HEREON REGARDING THE SIZE AND LOCATION OF EXISTING SERVICES AND/OR UTILITIES IS FURNISHED AS THE BEST AVAILABLE INFORMATION AND SHALL BE INTERPRETED AS THE CONTRACTOR SEES FIT WITH THE UNDERSTANDING THAT THE OWNER DISCLAIMS ALL RESPONSIBILITY FOR ITS SUFFICIENCY AND/OR ACCURACY.

SURVEY NOTE
INFORMATION FOR THIS SITE PLAN WAS TAKEN IN PART FROM PLAN OF SURVEY, PART OF LOTS 21, 22, 23, 25, 26, 27, 28, 29 & 30 REG. PLAN STR-2, CITY OF MISSISSAUGA AND PREPARED BY WAHBA SURVEYING.

NOTE:
FOR ADDITIONAL INFORMATION, DETAILS, DIMENSIONS AND CONFORMITY TO THE SITE PLAN, THE CONTRACTOR MUST REFER TO THE ARCHITECTURAL SITE PLAN PREPARED BY: FBP ARCHITECTS INC. PROJECT No. 19-1465 DWG. No. SP1 & SP2

MIN. PAVEMENT DESIGN FOR CONDOMINIUM

40mm	**HL3** TOP ASPHALT
60mm	**HL8** BASE ASPHALT
200mm	**20mm** CRUSHER-RUN LIMESTONE
250mm	**50mm** CRUSHER-RUN LIMESTONE
550mm	**TOTAL CONSTRUCTION DEPTH**

DRIVEWAY PAVEMENT DESIGN

25mm	**HL3** TOP ASPHALT
50mm	**HL8** BASE ASPHALT
150mm	**20mm** CRUSHER-RUN LIMESTONE
225mm	**TOTAL CONSTRUCTION DEPTH**

LEGEND

×(000.00)	-EXISTING ELEVATION TO REMAIN
× 000.00	-EXISTING ELEVATION
→	-DIRECTION OF SURFACE FLOW
000.00	-PROPOSED ELEVATION
	-PROP. CATCHBASIN
	-CATCHBASIN WITH TEMPORARY SEDIMENT CONTROL
	-EX.TREE TO REMAIN
	-EX.TREE TO BE REMOVED
O RD.	-ROOF DOWNSPOUTS
	-HYDRO TRANSFORMER
O S/L	-STREET LIGHT
FF	-FINISHED MAIN FLOOR ELEVATION
74	-CONSTRUCTION UNIT NUMBER
1250–80	-MUNICIPAL ADDRESS NUMBER
	-OVERLAND FLOW ROUTE
	-100YR PONDING LIMITS

STANDARD SITE PLAN DEVELOPMENT NOTES

(A) DEVELOPMENT DIVISION, PLANNING AND BUILDING DEPARTMENT

(i) I HEREBY CERTIFY THAT THIS DRAWING CONFORMS IN ALL RESPECTS TO THE SITE DEVELOPMENT PLANS AS APPROVED BY THE CITY OF MISSISSAUGA UNDER FILE NUMBER: **S.P.I.-**

SIGNED BY ARCHITECT OR ENGINEER

(ii) THE CITY OF MISSISSAUGA REQUIRES THAT ALL WORKING DRAWINGS SUBMITTED TO THE BUILDING DIVISION AS PART OF AN APPLICATION FOR THE ISSUANCE OF A BUILDING PERMIT SHALL BE IN CONFORMITY WITH THE SITE DEVELOPMENT PLAN AS APPROVED BY THE **CITY OF MISSISSAUGA, DEVELOPMENT AND DESIGN DIVISION.**

(iii) THE OWNER IS RESPONSIBLE FOR ENSURING THAT TREE PROTECTION HOARDING IS MAINTAINED THROUGHOUT ALL PHASES OF DEMOLITION AND CONSTRUCTION IN THE LOCATION AND CONDITION AS APPROVED BY THE PLANING AND BUILDING DEPARTMENT. NO MATERIALS (BUILDING MATERIALS, SOILS, ETC.) MAY BE STOCKPILED WITHIN THE AREA OF HOARDING. FAILURE TO MAINTAIN THE HOARDING AS ORIGINALLY APPROVED OR THE STORAGE OF MATERIALS WITHIN THE HOARDING WILL BE CAUSE FOR THE LETTER OF CREDIT TO BE HELD FOR **TWO (2)** YEARS FOLLOWING COMPLETION OF ALL SITE WORKS.

SIGNED BY PROPERTY OWNER DATED

(iv) THE UNDERSIGNED PROPERTY OWNER HEREBY ACKNOWLEDGES AND AGREES THAT THEY ARE RESPONSIBLE FOR BOTH THE INSTALLATION AND MAINTENANCE OF WORKS AS SHOWN ON THE STAMPED APPROVED SITE PLAN AND ASSOCIATED DRAWINGS, IN THE FORM, MANNER AND LOCATION AS SET OUT SAID DRAWINGS, WITHOUT ANY CHANGE OR ADDITION. ANY CHANGES TO THE PLANS, INCLUDING NEW DEVELOPMENT OR REDEVELOPMENT ON THE PROPERTY, ARE SUBJECT TO A NEW SITE PLAN APPLICATION AND APPROVAL PROCESS. IN ACCORDANCE WITH THE PROVISIONS OF SITE PLAN CONTROL **BY-LAW 0293-2006** (AS AMENDED). THE CITY OF MISSISSAUGA MAY RECOVER ANY COSTS INCURRED, INCLUDING INTEREST AND ADMINISTRATION EXPENSES, TO PROVIDE, MAINTAIN OR COMPLETE SITE WORKS, IF THE PROPERTY OWNER HAS FAILED TO DO SO, BY DRAWING UPON SECURITIES HELD, OR IF THE AMOUNT OF SECURITIES HELD BY THE CITY ARE NOT SUFFICIENT TO COVER THE COSTS INCURRED BY THE CITY WHICH CAN NOT BE REIMBURSED PR RECOVERED BY SECURITIES WILL BE ADDED TO THE TAX ROLL OF THE PROPERTY AND WILL BE COLLECTED IN THE SAME MANNER AS TAXES.

SIGNED BY PROPERTY OWNER DATED

(v) SHOULD THE INSTALLATION OF BELOW GROUND SERVICES REQUIRE HOARDING TO BE REMOVED, PLANNING AND BUILDING STAFF ARE TO BE CONTACTED PRIOR TO THE COMMENCEMENT OF SUCH WORK. SHOULD AN ALTERNATIVE SERVICE ROUTE NOT BE POSSIBLE, STAFF WILL INSPECT AND DOCUMENT THE CONDITION OF THE VEGETATION AND SERVICING INSTALLATION IN ORDER TO MINIMIZE DAMAGE TO THE VEGETATION.

(vi) THE APPLICANT WILL BE RESPONSIBLE FOR THE COST OF ANY UTILITIES RELOCATIONS NECESSITATED BY THE SITE PLAN.

(vii) CONSTRUCTION MATERIALS ARE **NOT** TO BE PUT OUT FOR COLLECTION.

(viii) ALL DAMAGED LANDSCAPE AREAS TO BE REINSTATED WITH TOPSOIL AND SOD PRIOR TO THE RELEASE OF SECURITIES.

(ix) ALL EXCESS EXCAVATED MATERIALS WILL BE REMOVED OFF SITE.

(x) ALL EXTERIOR LIGHTING WILL BE DIRECTED ONTO THE SITE AND WILL NOT INFRINGE UPON THE ADJACENT PROPERTIES.

(xi) IF A WELL IS DISCOVERED, IT WILL BE DECOMMISSIONED BY A **LICENSED WELL CONTRACTOR** OR TECHNICIAN IN ACCORDANCE WITH THE ONTARIO WATER RESOURCES ACT REGULATION 903 (FORMERLY 612/64) AND ANY OTHER APPLICABLE REGULATIONS AND GUIDELINES.

(xii) ANY FENCING ADJACENT TO MUNICIPAL LANDS IS TO BE LOCATED 15cm (6.0in.) INSIDE THE PROPERTY LINE.

(xiii) THE APPLICANT WILL BE RESPONSIBLE FOR ENSURING THAT ALL PLANS CONFORM TO TRANSPORT CANADA'S RESTRICTIONS.

(xiv) THE DESIGN AND NUMBER OF BARRIER FREE PARKING SPACES ARE TO CONFORM TO THE REQUIREMENTS OF BY-LAW NUMBER 0190-2014 TO ZONING BY-LAW 0225-2007, AS AMENDED, AND TO THE REVISED ACCESSIBLE PARKING BY-LAW NUMBER 0010-2016. PARKING SPACES RESERVED FOR PEOPLE WITH DISABILITIES BUST BE IDENTIFIED BY A SIGN, INSTALLED AT THE APPLICANT'S EXPENSE. ONE BARRIER FREE PARKING SIGN MUST BE RPOVIDED FOR EACH ACCESSIBLE SPACE. SIGNS FOR TYPE 'A' SPACES MUCT INCLUDE A 'VAN ACCESSIBLE' DESIGNATION. EACH SPACE MUCT BE IDENTIFIED BY PAVEMENT MARKINGS CONSISTING OF A 1525x1525mm WHITE BORDER CONTAINING THE INTERNATIONAL SYMBOL OF ACCESS ON A BLUE BACKGROUND FIELD.

(xv) ALL ROOF TOP UNITS MUST BE SCREENED FROM VIEW BY THE APPLICANT.

(xvi) TYPICAL AISLE WIDTH SHALL BE **7.00m** (23.0') WHERE ADJACENT TO PARKING SPACES.

(B) DESIGN DIVISION, PLANNING AND BUILDING DEPARTMENT

(i) GRADE WILL BE MET WITHIN A 33% MAXIMUM SLOPE AT THE PROPERTY LINES AND WITHIN THE SITE.

(ii) THE STRUCTURAL DESIGN OF ANY RETAINING WALL OVER 0.6m IN HEIGHT OR ANY RETAINING WALL LOCATED ON THE PROPERTY LINE IS TO BE SHOWN ON THE SITE GRADING PLAN FOR THIS PROJECT AND IS TO BE APPROVED BY THE CONSULTING ENGINEER FOR THIS PROJECT.

(iii) CONTINUOUS 15cm HIGH BARRIER-TYPE POURED CONCRETE CURBING WILL BE PROVIDED BETWEEN ALL ASPHALT AND LANDSCAPED AREAS THROUGHOUT THE SITE.

(C) TRANSPORTATION AND WORKS DEPARTMENT

(i) DRIVEWAYS ON THE MUNICIPAL RIGHT-OF-WAY SHALL BE PAVED BY THE APPLICANT.

(ii) ALL SURFACE DRAINAGE WILL BE SELF-CONTAINED, COLLECTED AND DISCHARGED AT A LOCATION TO BE APPROVED PRIOR TO THE ISSUANCE OF A BUILDING PERMIT AND THE EXISTING DRAINAGE PATTERN WILL BE MAINTAINED.

(iii) ALL PROPOSED CURBING WITHIN THE MUNICIPAL BOULEVARD AREA FOR THE SITE IS TO SUIT AS FOLLOWS: FOR ALL SINGLE FAMILY RESIDENTIAL PROPERTIES INCLUDING ON STREET TOWNHOUSES, ALL CURBING IS TO STOP AT THE PROPERTY LIMIT OR THE BACK OF THE MUNICIPAL SIDEWALK.

(iv) THE TOPS OF ANY CURBS BORDERING DRIVEWAYS WITHIN THE MUNICIPAL BOULEVARD WILL BE FLUSH WITH THE MUNICIPAL SIDEWALK.

(v) THE EXISTING DRAINAGE PATTERN WILL BE MAINTAINED EXCEPT WHERE NOTED.

(D) REGION OF PEEL WASTE MANAGEMENT

(i) ON-SITE WASTE COLLECTION WILL BE DONE THROUGH A PRIVATELY-ARRANGED CONTRACTOR.

(ii) THE STORAGE OF WASTE IN OUTDOOR AREAS OF FREE-STANDING BINS IS NOT PERMITTED.

(iii) THERE WILL BE NO CURBSIDE COLLECTION.

(iv) CARDBOARD AND GARBAGE REAR PACKER COLLECTION.

NOTES

1. ALL ROOF DOWNSPOUTS FROM EAVESTROUGH TO DISCHARGE ONTO SURFACE AND THE RUNOFF DIRECTED TOWARDS THE REAR WHERE POSSIBLE AND TO THE ROAD.
2. ROOF DOWNSPOUT IS LOCATED IN SUCH A MANNER AS TO DIRECT DRAINAGE AWAY FROM WALKWAYS, DRIVEWAYS OR PATIO AREAS.
3. FOUNDATION DRAINS TO HAVE SUMP PUMP FITTED WITH BACKWATER VALVE AND DISCHARGE ONTO SURFACE AND DIRECTED TO THE ROAD.
4. PRIOR TO CONSTRUCTION, THE CONTRACTOR IS TO VERIFY IN THE FIELD, THE EXACT SIZE AND INVERTS OF THE EXISTING W/S, SANITARY CONNECTION AND TO REPORT THEM TO THE ENGINEER.
5. CONTRACTOR TO MATCH EXISTING GRADES ALONG PROPERTY LINE.
6. APPLICANT / BUILDER IS TO BE ADVISED THAT THE EDGE OF ALL DRIVEWAYS MUST HAVE **1.20m** CLEARANCE BETWEEN IT AND THE EDGE OF ANY ABOVEGROUND UTILITIES.
7. PRIOR TO ANY CONSTRUCTION THE CONTRACTOR IS TO OBTAIN A ROAD CUT PERMIT FOR INSTALLATION OF ANY STORM, SANITARY AND/OR WATERSERVICE CONNECTIONS.
8. IF DURING CONSTRUCTION ANY **SEPTIC SYSTEM** IS DISCOVERED, THE SYSTEM MUST BE DECOMMISSIONED REMOVED IN ACCORDANCE WITH ALL APPLICABLE GUIDELINES AND REGULATIONS.

GENERAL NOTES

1. THE CONTRACTOR IS TO CHECK AND VERIFY ALL DIMENSIONS. IF ANY DISCREPANCIES, THEY MUST BE REPORTED TO THE ENGINEER IMMEDIATELY PRIOR TO CONSTRUCTION.
2. THE CONTRACTOR IS RESPONSIBLE FOR LOCATING AND PROTECTING ALL UTILITIES DURING CONSTRUCTION. GAS, HYDRO, TELEPHONE OR ANY OTHER UTILITIES THAT MAY EXIST ON THE SITE OR WITHIN THE STREETLINES MUST BE LOCATED BY ITS OWN UTILITIES AND VERIFIED PRIOR TO CONSTRUCTION.
3. ALL CONNECTIONS SHALL BE INSTALLED AS PER MUNICIPAL STANDARDS AND SPECIFICATIONS.
4. BUILDER IS TO VERIFY TO THE ENGINEER THAT THE FINAL FOOTING ELEVATION AND TOP OF FOUNDATION WALL ELEVATION ARE IN CONFORMITY WITH THE BUILDING CODE AND THE CERTIFIED GRADING PLAN PRIOR TO PROCEEDING.
5. THE ELEVATION OF THE SIDE SWALE AT THE BUILDING LINE SHALL BE A MINIMUM OF **150mm** BELOW THE BUILDING LINE AT THE CENTRE OF THE SWALE.
6. OUTSIDE FINISHED GRADE TO BE A MINIMUM OF **150mm** BELOW BRICK VENEER ELEVATION.
7. PRIOR TO ANY SODDING, THE BUILDER IS TO ENSURE TO THE SOILS CONSULTANT AND/OR THE ENGINEER THAT THE LOT HAS BEEN GRADED AND TOPSOILED AND SODDED COMPLETELY WITH A MINIMUM DEPTH OF **100mm** OF TOPSOIL AND **NO 1**. NURSERY SOD AND A MINIMUM DEPTH OF **150mm** OF CRUSHED STONE TO BE PROVIDED ON THE ENTIRE LENGTH OF EACH DRIVEWAY ON A FIRM SUBGRADE AND THE DRIVEWAY TO BE PAVED WITH A MINIMUM COMPACTED DEPTH OF **75mm** OF ASPHALT BETWEEN THE CURB AND THE GARAGE.
8. NO SODDING ON ANY LOTS IS PERMITTED UNTIL PRELIMINARY INSPECTION IS DONE BY THE ENGINEER AND THE BUILDER.
9. THE DRIVEWAY GRADE WILL BE COMPATIBLE WITH THE EXISTING OR FUTURE SIDEWALK AND CURB DEPRESSION WILL BE PROVIDED FOR EACH ENTRANCE.
10. DRIVEWAY GRADES SHOULD NOT BE LESS THAN **2.0%** AND NOT GREATER THAN **8%**.
11. LAWN AND SWALES SHALL HAVE A MINIMUM SLOPE OF **1.5%** (PREFERRED 2%) AND A MAXIMUM SLOPE OF **6%**.
12. WHERE GRADES IN EXCESS OF 6% ARE REQUIRED, THE MAXIMUM SLOPE SHALL BE 3:1. GRADE CHANGES IN EXCESS OF 1.0m ARE TO BE ACCOMPLISHED BY USE OF A RETAINING WALL. RETAINING WALLS HIGHER THAN 0.6m SHALL HAVE A FENCE INSTALLED ON THE HIGH SIDE.
13. THE SERVICE CONNECTION TRENCH WITHIN THE TRAVELLED PORTION OF THE ROAD ALLOWANCE SHALL BE BACKFILLED WITH UNSHRINKABLE BACKFILL MATERIAL AS PER **C.M. STDS. 2220.030, 2220.031 AND 2220.032** UNLESS OTHERWISE SPECIFIED PRIOR APPROVAL FOR OTHER BACKFILL MATERIAL HAS BEEN OBTAINED.
14. ALL WATERMAINS AND WATER SERVICE MATERIALS AND CONSTRUCTION METHODS MUST CORRESPOND TO CURRENT MUNICIPAL STANDARDS & SPECIFICATIONS.
15. WATERMAINS AND/OR WATER SERVICES ARE TO HAVE A MIN. DEPTH OF **1.7m** WITH A MIN. HORIZONTAL SPACING OF **1.2m** FROM THEMSELVES AND OTHER UTILITIES.
16. SEDIMENT CONTROL FENCE TO BE INSTALLED AS PER **C.M. STD. 2940.010**.

FIRE DEPARTMENT

1. FIRE ROUTE WILL BE DESIGNATED AS PER CITY OF MISSISSAUGA **BYLAW (1036-81)** AS AMENDED PRIOR TO OCCUPANCY OF THE BUILDINGS.
2. FIRE ROUTES TO BE DESIGNED TO WITH STAND A LOAD NOT LESS THAN **11,363Kg**. PER AXLE AND HAVE A CHANGE IN GRADIENT OF NOT MORE THAN **1 IN 12.5** OVER A DISTANCE **15.0m** AS PER **BY LAW 1036-81.**
3. ALL **12.0m** TURNING RADII HAVE MIN. CLEARANCE OF **3.0m** BETWEEN THE CENTRE LINE OF TURNING RADII AND ANY CURB OR PART OF BUILDING.
4. PRIVATE FIRE HYDRANTS SHALL BE FLOW TESTED AND COLOUR CODED IN CONFORMANCE WITH THE REGION OF PEEL "UNIFORM MARKING OF HYDRANTS".

ROADS

1. ALL FILL WITHIN ROAD ALLOWANCE AND EASEMENTS TO BE COMPACTED TO MIN **95%** STANDARD PROCTOR DENSITY. THE SUITABILITY AND COMPACTION OF ALL FILL MATERIALS TO BE CONFIRMED BY A RECOGNIZED SOIL CONSULTANT TO THE CITY ENGINEER AND THE SUBGRADE OF ALL ROADWAYS SHALL BE PROOF ROLLED UNDER THE SUPERVISION OF THE SOILS CONSULTANT PRIOR TO THE INSTALLATION OF ANY ROAD BASE MATERIALS.
2. THE DEVELOPER/CONTRACTOR IS RESPONSIBLE FOR LOCATING AND PROTECTING ALL EXISTING UTILITIES PRIOR TO AND DURING CONSTRUCTION. LOCATION OF EXISTING UTILITIES, WATERMAINS, SEWERS AND OTHER UNDERGROUND OR ABOVEGROUND UTILITIES AND STRUCTURES ARE NOT NECESSARILY SHOWN ON THE DRAWINGS. PRIOR TO COMMENCEMENT OF WORK, CONTRACTOR MUST EXAMINE THE ACCURACY OF SUCH EXISTING UTILITIES AND STRUCTURES WHETHER SHOWN OR NOT AND ASSUME ALL LIABILITY FOR DAMAGE TO THEM. ANY DISCREPANCIES TO LOCATION OF EXISTING WATERMAINS AND SEWERS TO BE RECTIFIED AT DEVELOPER/ CONTRACTOR'S EXPENSE.
3. THE DEVELOPER/CONTRACTOR MUST ENSURE THAT A SUBGRADE CERTIFICATE IS ISSUED BY THE GEOTECHNICAL SOILS CONSULTANT TO THE ENGINEER. ONLY UPON VERIFICATION AND APPROVAL OF THE SUBGRADE BY THE LOCAL AUTHORITY INSPECTION DEPARTMENT WILL COMMENCEMENT OF ANY ROAD BASE MATERIALS BE PLACED. FAILURE TO FOLLOW THIS PROCEDURE WILL MEAN THE REMOVAL OF ROAD BASE MATERIALS AND/OR ADDITIONAL TESTING THAT PROPER COMPACTION HAS BEEN ACHIEVED AT THE SUBGRADE AT DEVELOPER/CONTRACTOR'S EXPENSE.
4. TRENCH BACKFILLING ON PROPOSED ROADS SHALL COMPLY WITH CITY OF MISSISSAUGA **SECTION 4.02.06** - (TRENCH BACKFILLING ON ROADS) AS PROVIDED IN THE CITY'S DEVELOPMENT REQUIREMENT MANUAL.
   a) THE TOP 1000mm OF THE SUBGRADE IS TO BE COMPACTED TO A MINIMUM **98%** OF SPD WITHIN 2% OF THE OPTIMUM MOISTURE CONTENT.
5. ALL CONNECTIONS WITHIN PAVED PORTION OF ANY EXISTING ROAD TO BE BACKFILLED WITH UNSHRINKABLE BACKFILL MATERIAL AS PER **C.M. STDS. 2220.030, 2220.031 AND 2220.032**, UNLESS OTHERWISE SPECIFIED PRIOR APPROVAL FOR OTHER BACKFILL MATERIAL HAS BEEN OBTAINED.
6. ALL OTHER EXCAVATIONS WITHIN EXISTING ROAD ALLOWANCE SHALL BE BACKFILLED TO SUBGRADE ELEVATION WITH GRANULAR 'C' MATERIAL AND COMPACTED TO A MINIMUM OF 95% STANDARD PROCTOR DENSITY. SURFACE RESTORATION SHALL BE EQUAL TO OR BETTER THAN EXISTING CONDITION IN ACCORDANCE WITH **O.P.S.S. 507**
7. CURB TO BE AS PER **C.M. STD. 2230.010** UNLESS OTHERWISE NOTED.
8. SUBDRAIN UNDERNEATH ALL CURBS AS SPECIFIED ON PLANS ON EXISTING ROADS.
9. ALL DISTURBED AREAS WITHIN EXISTING ROAD ALLOWANCE TO BE REINSTATED WITH TOPSOIL AND SOD TO THE SATISFACTION OF CITY OF MISSISSAUGA.
10. SIDEWALKS TO BE AS PER **C.M. STD. 2240.010** AND PEDESTRIAN RAMPS TO BE PROVIDED AT ALL INTERSECTIONS AS PER **C.M. STDS. 2240.020 AND 2240.030.**

C.M. BENCHMARK No. 259 **ELEVATION: 166.73m**

DESCRIPTION: ON THE NORTH FACE, 2' WEST OF THE EAST CORNER OF A RED HOUSE AT THE SOUTHWEST CORNER OF QUEEN ST. AND BRITANNIA RD. WEST (STREETSVILLE)

No.	DATE	REVISION	INIT.
1.	APR. 20, 2021	REVISED GRADING AS PER NEW ARCHITECTURAL SITE PLAN.	E.W.

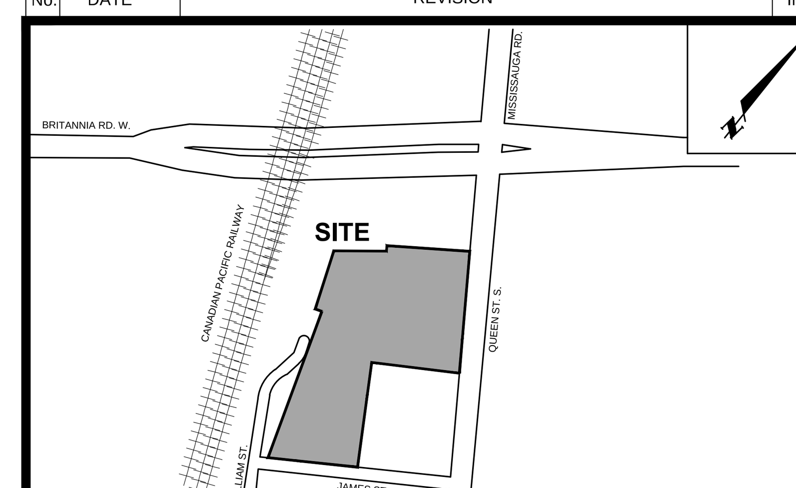

KEY PLAN N.T.S.

SKIRA & ASSOCIATES LTD.
CONSULTING ENGINEERS
3464 Semenyk Court, Suite 100, Mississauga, Ontario L5C 4P8
Tel. (905) 276-5100 Fax. (905) 270-1936 Email - info@skiraconsult.ca

PROPOSED CONDOMINIUM TOWNHOUSES

PART PF LOTS 21, 22, 23, 25, 26, 27, 28, 29 & 30 REG. PLAN. STR-2

8,10 & 12 QUEEN STREET SOUTH, 2 WILLIAM STREET, 16 JAMES STREET

CITY PARK HOMES (STREETSVILLE) INC.
950 NASHVILLE RD, WOODBRIDGE, ON, L4H 3N5

MISSISSAUGA

SITE GRADING PLAN

S.P.

DATE: JANUARY 2021	AREA: Z-39	DWG.No. C102
SCALE: 1:300	DRAWN BY: E.W.	
CITY FILE:	REGION FILE:	PROJECT No. 220-M108