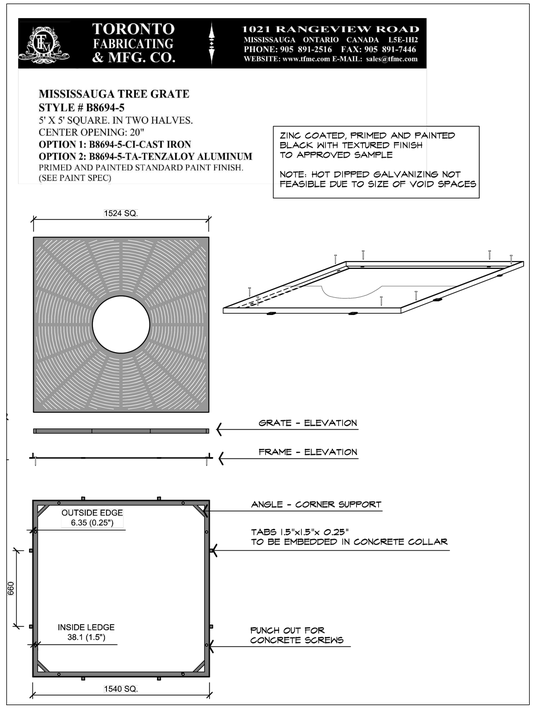

1 TREE GRATE

Scale: NTS

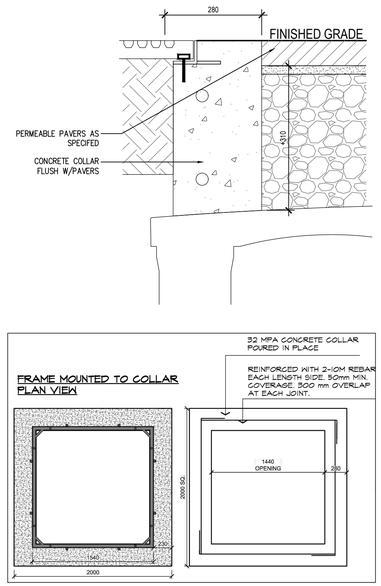

2 CONCRETE COLLAR

Scale: NTS

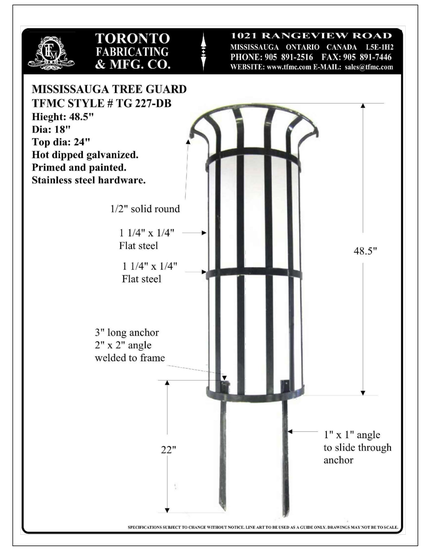

3 TREE GUARD

Scale: NTS

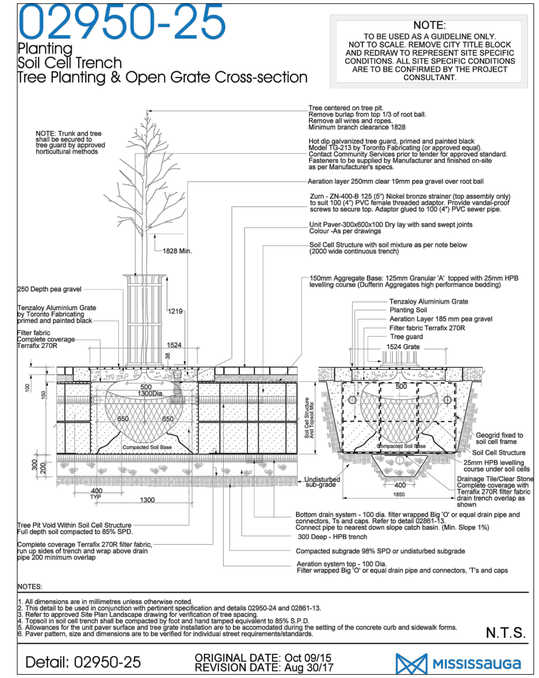

4 SOIL CELL TRENCH

Scale: NTS

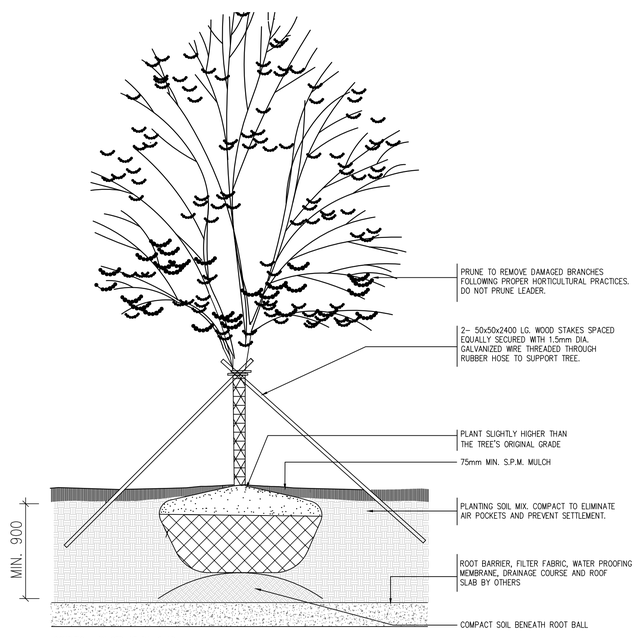

5 TREE PLANTING ON SLAB

Scale: NTS

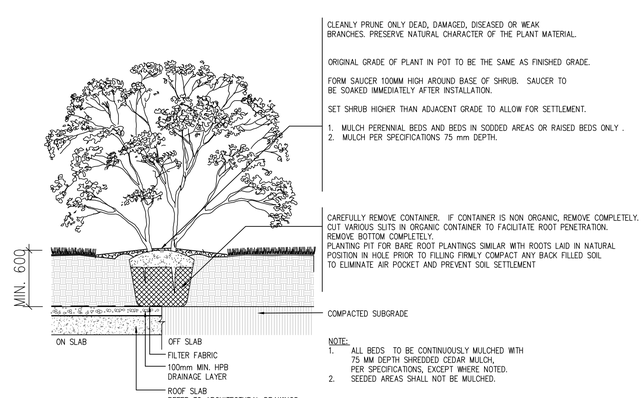

6 SHRUB PLANTING

Scale: NTS

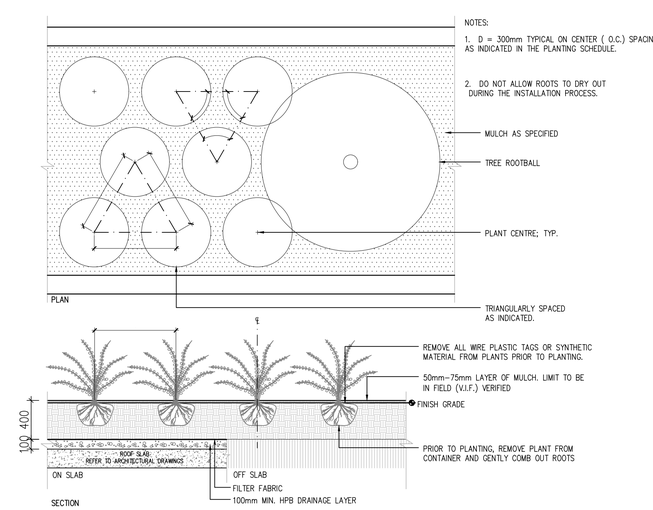

7 PERENNIALS PLANTING

Scale: NTS

CONTRACTOR SHALL CHECK ALL DIMENSIONS ON THE WORK AND REPORT ANY DISCREPANCY TO THE LANDSCAPE ARCHITECT BEFORE PROCEEDING. ALL DRAWINGS AND SPECIFICATIONS ARE THE PROPERTY OF THE LANDSCAPE ARCHITECT AND MUST BE RETURNED AT THE COMPLETION OF THE WORK. THIS DRAWING IS NOT TO BE USED FOR CONSTRUCTION UNTIL SIGNED BY THE LANDSCAPE ARCHITECT.

KEY MAP

LEGEND

REVISIONS

No.	Description	Date
-		
-		
-		
-		
3	Issued for ZBA Resubmission	Dec. 18/25
2	Issued for ZBA resubmission	Aug. 15/25
1	Issued for ZBA	Jul. 09/24

CITY APPROVAL STAMP

ASSOCIATION OF LANDSCAPE ARCHITECTS ONTARIO MEMBER ROBERT NG

N

NAK design strategies
421 RONCESVALLES AVENUE, TORONTO, ON M6R 2N1 CANADA
T 416.340.8700 F 416.340.7100 NAKDESIGNSTRATEGIES.COM

PROJECT
3115 HURONTARIO STREET
Mississauga, Ontario
APP. NO: OZ/OPA 22-24 W7

OWNER
CLEARBROOK DEVELOPMENT Ltd.

TITLE
LANDSCAPE DETAILS

DATE: MAY. 16/22
SCALE: AS SHOWN
DRAWN: HK
CHECKED: RN
JOB NO.: 22-106

SHEET
L500