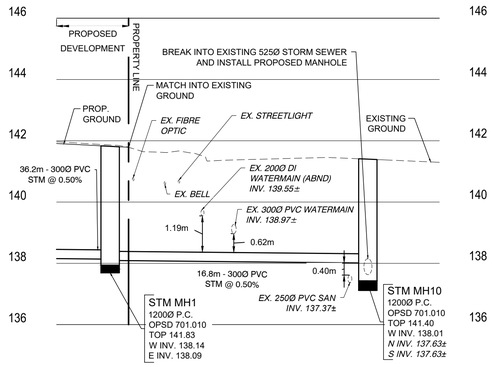

SECTION 1-1
STORM SERVICE CONNECTION
SCALE H 1:200 V 1:100

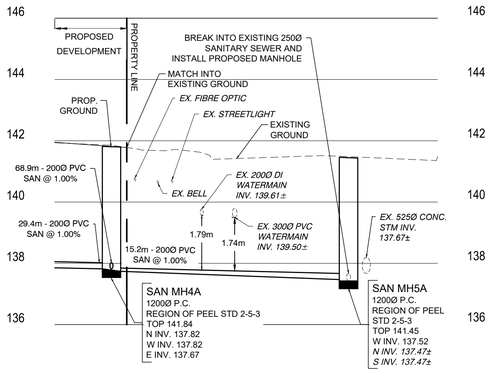

SECTION 2-2
SANITARY SERVICE CONNECTION
SCALE H 1:200 V 1:100

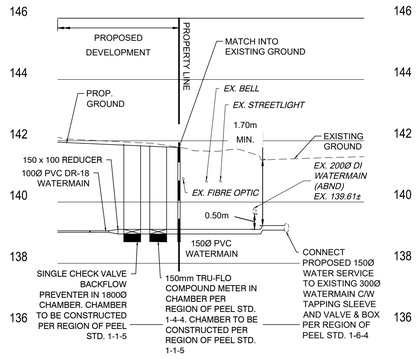

SECTION 3-3
WATER SERVICE CONNECTION
SCALE H 1:200 V 1:100

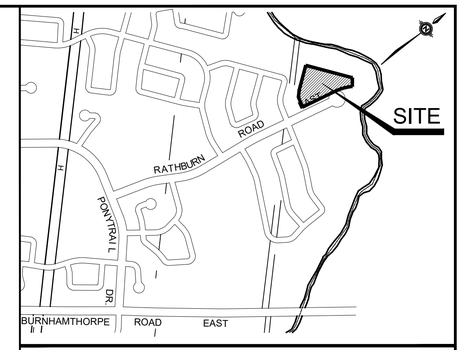

KEY PLAN NTS

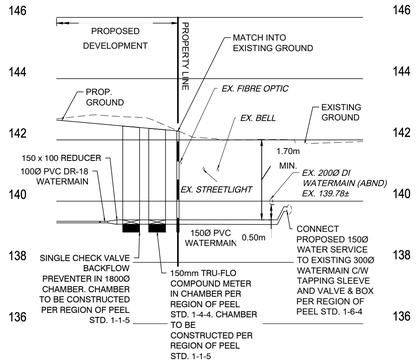

SECTION 4-4
WATER SERVICE CONNECTION
SCALE H 1:200 V 1:100

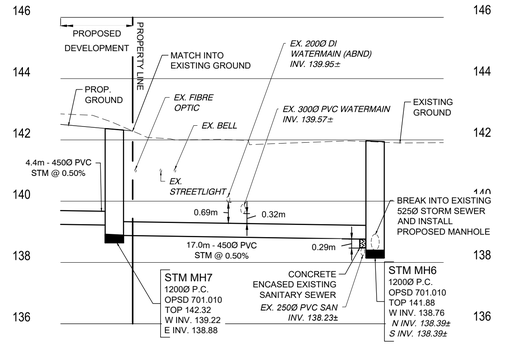

SECTION 5-5
STORM SERVICE CONNECTION
SCALE H 1:200 V 1:100

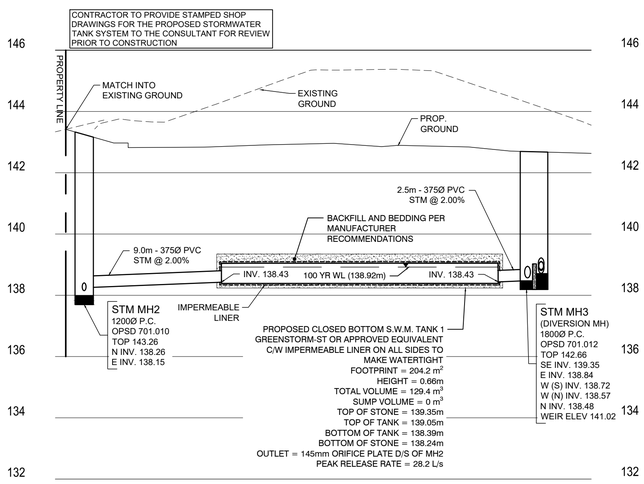

SECTION 6-6
STORMWATER MANAGEMENT TANK
SCALE H 1:200 V 1:100

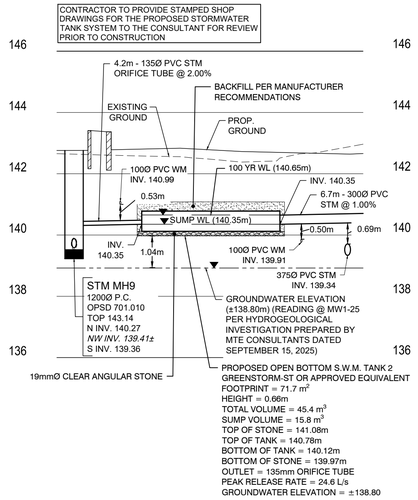

SECTION 7-7
STORMWATER MANAGEMENT TANK
SCALE H 1:200 V 1:100

REFER TO DRAWING C-102b FOR SITE SERVICING PLAN FOR SECTION LOCATIONS

BENCHMARK NOTES:

ELEVATIONS SHOWN HEREON ARE GEODETIC AND ARE REFERRED TO THE CITY OF MISSISSAUGA BENCHMARK NO. 766, LOCATED ON THE NORTH FACE, WEST CORNER OF A RED BRICK TWO-STOREY HOUSE #4215 AT THE SOUTHEAST CORNER OF GARNETWOOD CHASE AND RATHBURN ROAD EAST, HAVING A PUBLISHED ELEVATION OF 141.957 METRES.

ALL DIMENSIONS AND ELEVATIONS ARE IN METRES UNLESS OTHERWISE NOTED.

PIPE SIZES ARE IN MILLIMETRES

No.	REVISIONS	DATE	APPR. BY
3	ISSUED FOR 3RD S.P.A SUBMISSION	JUL 15/26	D.A.
2	ISSUED FOR S.P.A SUBMISSION	MAR 04/26	D.A.
1	ISSUED FOR S.P.A SUBMISSION	SEPT 08/25	D.A.

CLIENT

CAPREIT APARTMENTS INC.
11 Church Street, Toronto, ON Canada M5E 1W1
Office (416) 861-9404
E-mail hello@capreit.net

PROJECT TITLE

2121 RATHBURN ROAD EAST
MISSISSAUGA, ONTARIO
STACKED RESIDENTIAL RENTAL
TOWNHOUSE DEVELOPMENT

STAMP

LICENSED PROFESSIONAL ENGINEER
T. M. ABIKOYE
100546720
2026-07-15
PROVINCE OF ONTARIO

APPROVED AS TO FORM IN RELIANCE UPON THE PROFESSIONAL SKILL AND ABILITY OF ENVISION CONSULTANTS LTD. AS TO DESIGN AND SPECIFICATION

DIRECTOR OF DEVELOPMENT / TRANSPORTATION ENGINEERING

CONSULTANT

ENVISION CONSULTANTS LTD
6415 Northwest Dr, Mississauga, ON Canada L4V 1X1
Office (905) 677-0202
E-mail admin@envisionconsultants.ca

MUNICIPALITY

MISSISSAUGA
Region of Peel working with you

CITY FILE NO.: SP 25-54 W3, REGION FILE NO.: C604649

SHEET TITLE

SITE SERVICING CROSS SECTIONS

DESIGNED BY:	DATE:	CHECKED BY:
D.A.	SEPT 2025	A.W.
DRAWN BY: M.R.	PROJECT No. 25-1026	
SCALES: 1: 200		DRAWING No. C-103

FILENAME: C:\Users\ANDRER~1\AppData\Local\Temp\AcPublish_32280\25-1026_SS1-SS1-ESC1-NT1.dwg
PLOTDATE: Jul 15, 2026 - 4:46pm, AndreRocha