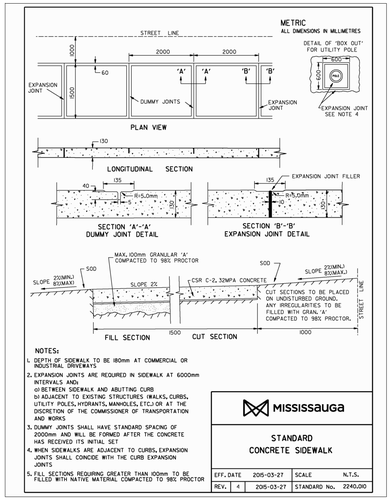

1 Concrete Sidewalk
City of Mississauga Standard Detail No. 2240.010
Scale: NTS

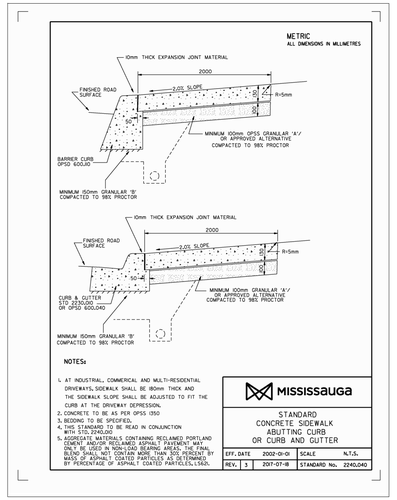

2 Concrete Sidewalk Abutting Curb
City of Mississauga Standard Detail No. 2240.040
Scale: NTS

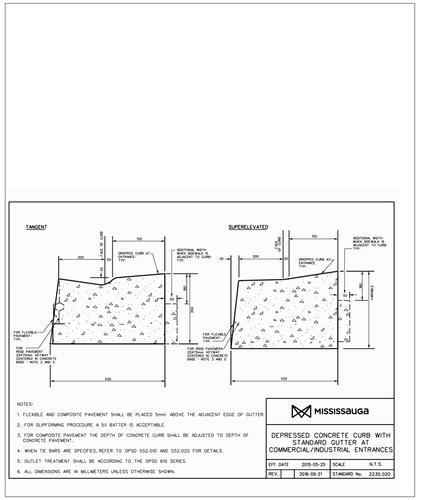

3 Concrete Mountabel Curb with Gutter
City of Mississauga Standard Detail No. 2230.020
Scale: 1:NTS

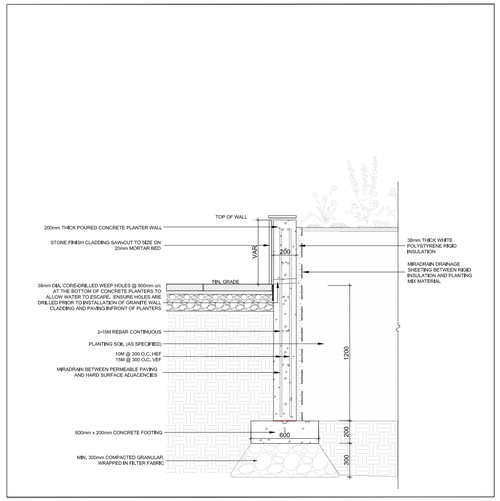

4 Concrete Planter
N.T.S

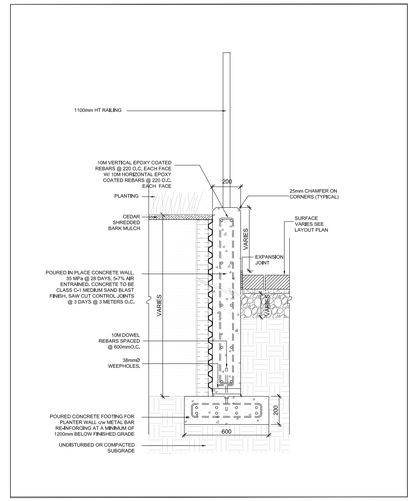

4a Concrete Wall (Sunken Patio)
N.T.S

Key Plan

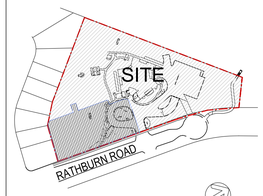

Legend

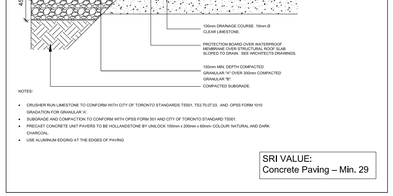

5 Precast Concrete Unit Pavers
Pedestrian Grade (On/Off Slab)
Scale: NTS

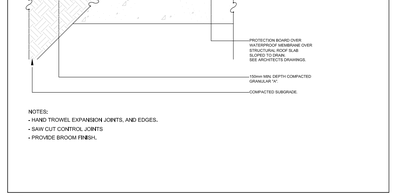

6 Poured In Place Concrete Paving
Pedestrian Grade (On/Off Slab)
Scale: NTS

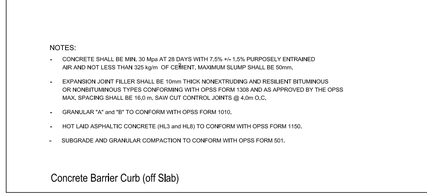



7 Barrier Curb
Scale: NTS

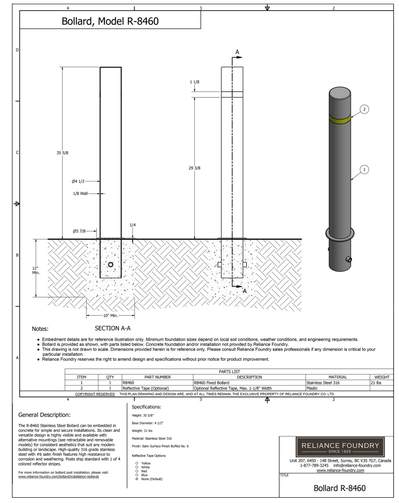

8 Vehicular Bollard
Reliance Foundry - R8460
Scale: NTS

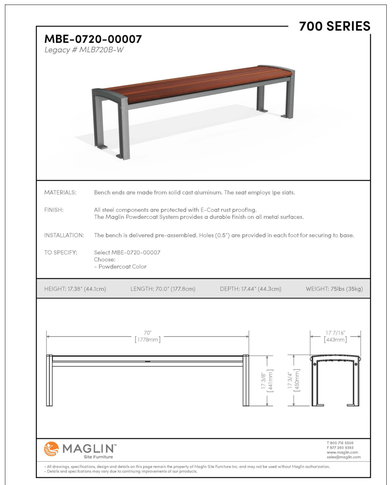

9 Bench (Model: MLB720B)
Supplied by Maglin
N.T.S.

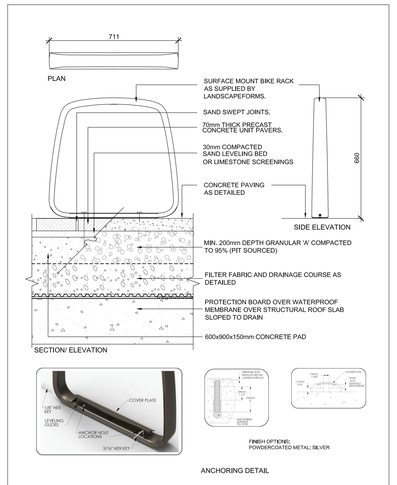
711
PLAN
SURFACE MOUNT BIKE RACK AS SUPPLIED BY LANDSCAPEFORMS.
SAND SWEPT JOINTS.
70mm THICK PRECAST CONCRETE UNIT PAVERS.
30mm COMPACTED SAND LEVELING BED OR LIMESTONE SCREENINGS
CONCRETE PAVING AS DETAILED
660
SIDE ELEVATION
MIN. 200mm DEPTH GRANULAR 'A' COMPACTED TO 95% (PIT SOURCED)
FILTER FABRIC AND DRAINAGE COURSE AS DETAILED
PROTECTION BOARD OVER WATERPROOF MEMBRANE OVER STRUCTURAL ROOF SLAB SLOPED TO DRAIN
600x900x150mm CONCRETE PAD
SECTION/ ELEVATION
LOCKING MECHANISM
COVER PLATE
LOCKING DISC
LOCKING DISC
LOCKING MECHANISM
LOCKING DISC
LOCKING MECHANISM
LOCKING DISC
LOCKING MECHANISM