

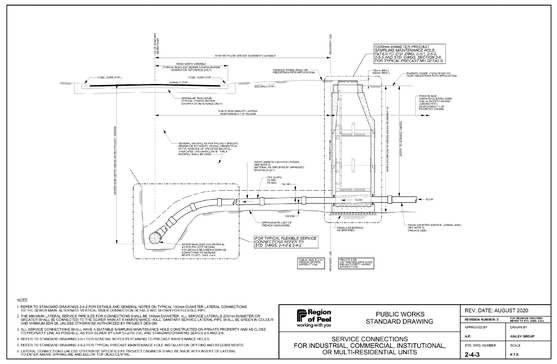

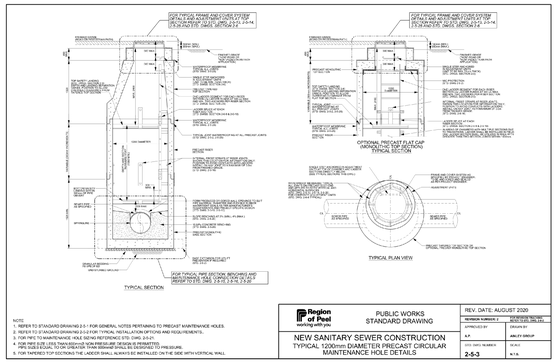

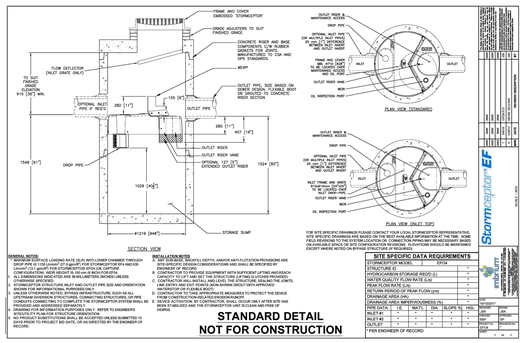

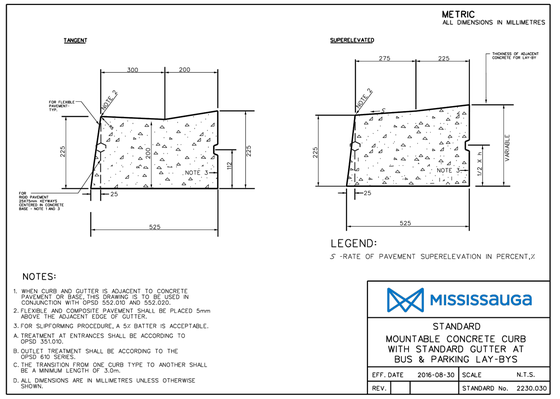

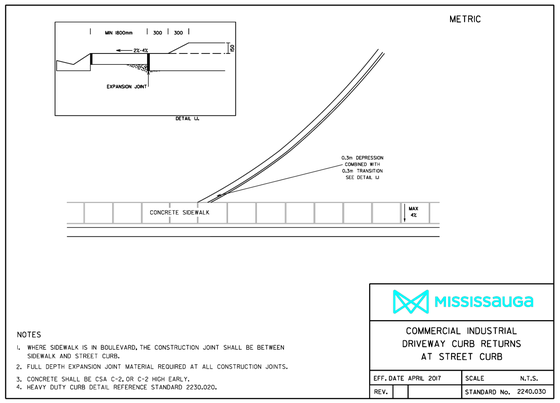

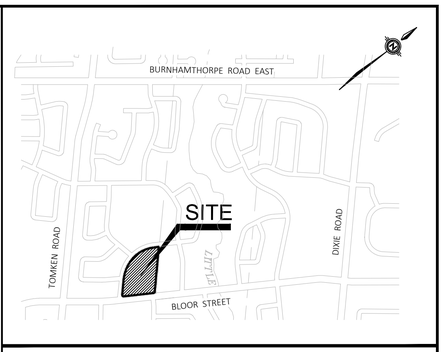

KEY PLAN NTS

BENCHMARK NOTES:

ELEVATIONS SHOWN HEREON ARE GEODETIC AND ARE REFERRED TO CITY OF MISSISSAUGA BENCH MARK No.698 , HAVING AN ELEVATION =130.356 metres.

ALL DIMENSIONS AND ELEVATIONS ARE IN METRES UNLESS OTHERWISE NOTED.

PIPE SIZES ARE IN MILLIMETRES

No.	REVISIONS	DATE	APPR. BY
3	ISSUED FOR ZBA & S.P.A. SUBMISSION #3	SEP 11/26	D.A.
2	ISSUED FOR 2ND S.P.A. SUBMISSION	JAN 23/26	D.A.
1	ISSUED FOR 1ST S.P.A. SUBMISSION	AUG 14/25	D.A.

CLIENT

CAPREIT APARTMENTS INC.

11 Church Street, Toronto, ON Canada M5E 1W1
Office (416) 861-8404
E-mail hello@capreit.net

PROJECT TITLE

1055 BLOOR STREET MISSISSAUGA, ONTARIO

STACKED RESIDENTIAL TOWNHOUSE RENTAL DEVELOPMENT

CITY FILE NO.: SP 25-49 W3, REGION FILE NO.: C601718

STAMP

LICENSED PROFESSIONAL ENGINEER
T. M. ABIKOYE
100546720
2026-09-11
PROVINCE OF ONTARIO

APPROVED AS TO FORM IN RELIANCE UPON THE PROFESSIONAL SKILL AND ABILITY OF ENVISION CONSULTANTS LTD. AS TO DESIGN AND SPECIFICATION

DIRECTOR OF DEVELOPMENT / TRANSPORTATION ENGINEERING

CONSULTANT

ENVISION CONSULTANTS LTD
6415 Northwest Dr. Mississauga, ON Canada L4V 1X1
Office (905) 677-0202
E-mail admin@envisionconsultants.ca

MUNICIPALITY

MISSISSAUGA
Region of Peel working with you

SHEET TITLE

DETAILS

DESIGNED BY: D.A.	DATE: SEPT 2026	CHECKED BY: A.W.
DRAWN BY: M.R.	PROJECT No. 25-1018	
SCALES: AS NOTED		DRAWING No. C-104

FILENAME: C:\Users\DallaAbakye\ACACDocs\Envision\Envision - LDI\Project Files\25-1018 1055 Bloor St\Mun\Eng Dwgs\25-1018_SC01-SS01-NT1-ESC1.dwg
PLOTDATE: Sep 11, 2026 - 4:16pm, DallaAbakye